4 Methodology

4.1 Introduction

1 This section lays out the details of specific trials within this Project, which forms the first phase of the longer programme envisaged by CE Electric and British Gas. It lays out the specific learning to be generated, based upon an assessment of the combinations of components (i.e. customer choices and solution) likely to create most value, founded upon existing published research.

2 The section is arranged according to the learning outcomes we seek to achieve, specifically:

- Learning Outcome 1: understanding of current, emerging and possible future customer (load and generation) characteristics;
- Learning Outcome 2: to what extent are customers flexible in their load and generation, and what is the cost of this flexibility?
- Learning Outcome 3: to what extent is the network flexible and what is the cost of this flexibility?
- Learning Outcome 4: what is the optimum solution to resolve network constraints driven by the transition to a low carbon economy?; and
- Learning Outcome 5: what are the most effective means to deliver optimal solutions between customer, supplier and distributor?

3 We then discuss the kind of analysis we will need to generate these learning outcomes, which in turn defines the data we need to gather. This allows us to specify a set of "test cells", where we:

- Define in more detail what we want to learn;
- Review the options to analyse data to generate that learning;
- Define the test cell to provide the information that analysis requires, including:
  - Data gathering to support the analysis;
  - Customer propositions to drive customer response;
  - Customer-side equipment to change customer behaviour;
  - Network-side equipment to increase flexibility and, in some cells, directly drive customer response;
- Set the size of the test cell. Where customer response is involved, a statistically significant sample will generally be around 100 customers: we also provide for a 50% drop-out rate. Where network response is involved, variability is very low and smaller cells suffice; and
- Consider other test cells, to ensure that each cell is exclusive and provides suitable comparators to other test cells, so that we can isolate the impact.

4 That is, each test cell will be defined by what we want to learn. This allows us to drill down from the broad Learning Outcomes to focussed tests that examine specific opportunities.

5 Finally, a set of conclusions is drawn that summarises what we plan to do. Starting from what we want to learn, this will describe the customers we will engage, the technologies we will deploy, and the non-network and network solutions we will pilot.

4.2 Learning Outcome 1: understanding of current, emerging and possible future customer (load and generation) characteristics

4.2.1 Detailed Outcomes

6 In seeking better to understand current, emerging and possible future customer (load and generation) characteristics, the key questions that emerge are:

- What are today's domestic and small commercial load and generation profiles, and how do they vary or group?
- What are the current profiles for merchant generation connected to the distribution network?
- How are load and generation profiles likely to change, for all customer types (domestic/small commercial and I&C[1])?

7 We want to:

- Establish a new set of load profiles to update ACE49 (statistical methods for calculating demand and voltage regulation on LV radial distribution systems, 1981), to improve the planning of LV networks, reducing connection/reinforcement costs;
- Establish a new set of generation profiles to update ETR 130 (Application Guide For Assessing the capacity of networks containing Distributed Generation, 2006), better to recognise the contribution of generation to system security, reducing general reinforcement costs;
- Understand, as best we can, how future economic, social and technological trends will change the patterns of the components of load and generation, so we can better forecast where we will (and will not) need to reinforce the network; and
- Quantify the impact on power quality of new disruptive loads such as heat pumps.

4.2.2 Drivers

8 The likely drivers for changing patterns of producing and consuming energy, reflecting wider societal concern over unsustainable consumption of fossil fuel, are:

- Energy efficiency programmes generally, reinforced:
    - at the appliance level by DEFRA's market transformation programme;
    - for the I&C market by CRC-EES[2] and CCL (Climate Change Levy) exemption for I&C-scale good quality CHP;
    - for the domestic market by CERT and CESP[3];
- The availability of smart appliances (a technology push for which we shall seek to establish a commercial proposition to create customer pull);

[1] Industrial and Commercial: for simplicity, taken here as any customers with a mandatory ("100kW") half-hourly meter
[2] The Carbon Reduction Commitment-Energy Efficiency Scheme, a cap and trade mechanism for the I&C sector
[3] Carbon Emissions Reduction Target and Community Energy Saving Programme, supplier obligations to deliver given levels of energy (and carbon) consumption reduction amongst their customers. This can include the provision/subsidy of insulation, micro-generation and more efficient appliances. Under CERT, at least 40 per cent of the programme must be associated with defined social groups likely to be in fuel poverty. CESP promotes a whole house approach, restricted to defined areas again likely to have customers in fuel poverty

- Feed-In Tariffs (FITs);
- Renewable heat incentive (RHI); and
- Electric vehicle stimulus packages.

9 Reduction in load through energy efficiency generally eases network constraints, although it can reduce the ability for generation to be absorbed locally. It will not be considered further here.

10 FITs are available up to 5MWe, although the tariffs are more attractive the smaller the installation. AD (Anaerobic digestion), hydro, solar PV (photo-voltaic) and wind are all supported. Planning is less of a constraint for these groups, although resource constraints will still remain. We expect to see farm/sewage AD, hydro and wind at this scale.

11 The technologies supported by FITs are:

- Solar PV (there is a banding breakpoint at 4kWe, which also seems a reasonable size for a domestic installation);
- Micro-CHP (domestic installations below 2kWe);
- Wind;
- AD; and
- Hydro.

12 Small commercial CHP is not supported by FIT, but is exempt from the CCL.

13 Wind[4] is excluded from the General Permitted Development Order, unlike solar PV and micro-CHP, which will constrain its deployment. AD and hydro are heavily constrained by the available resource, particularly at domestic/small commercial scale. This leaves the technologies we currently expect to have the greatest impact on the distribution network as solar PV[5] and micro-CHP[6], although we note that FIT support for the latter will initially be limited to 30,000 units nationally.

14 A number of installers already offer PV, some with novel financing arrangements linked to FIT[7]. Both Stirling engine and fuel cell micro-CHP technologies will be ready for trial at scale during this phase of the programme. For example, we note that Calor offer a Stirling engine micro-CHP solution for their LPG customers, and have announced a fuel cell version for 2012[8].

15 The key technology brought forward by RHI is heat pumps. The tariffs are more attractive the smaller the installation, although the only absolute constraint is that installations over 350kWth[9] must be ground-sourced to qualify. While RHI

[4] Recent studies such as (Micro wind turbines in the UK domestic sector, 2010, Peacock et al.) suggest that there are still barriers to be overcome before wind reaches it potential. Combined with micro-wind low penetration rates of approximately a fifth of other micro-generation such as PV (SIAM 2004) or lower (Element Energy on the potential of micro generation, 2008) along with planning and geographical constraints wind is not considered further.
[5] Eltawil & Zhao, (2010) Grid-connected photovoltaic power systems: Technical and potential problems—A review,
[6] Thomson and Infield's (2008) Modelling the impact of micro-combined heat and power generators on electricity distribution networks,
[7] Homesun, ISIS Solar and A Shade Greener all offer 'solar for free' deals that make PV accessible to wide range of domestic and social groupings..
[8] http://www.calor.co.uk/about-calor/press-centre/ecobuild/ [accessed 18th August 2010]
[9] These are large commercial premises: a typical house requires 12kWth

has not yet been confirmed, we expect it to survive because renewable heat is a major part of a lower-carbon economy.

16 There are both Government EV (electric vehicle) stimulus packages and some manufacturer-led initiatives[10]. The North-East is at the leading edge of EV development, with the Plugged-In Places pilot in Newcastle and EV development by Nissan. We will continue to engage with these schemes, to build in flexible charging solutions and pilot them connected to our networks.

4.2.3 Network Impacts

17 Any new power flow will affect existing voltage and thermal constraints. Where new generation offsets existing load (and vice versa), it will tend to ease constraints. However, we expect much new generation to more than offset existing load at some time, creating a reverse power flow[11,12].

18 The main way in which distribution networks can be considered to be unidirectional is in voltage control. The permissible voltage limits have been allocated on the assumption that power flows only towards customers. Therefore, reverse power flows will often create voltages above legal limits.

19 That is, networks are designed to run at maximum permissible voltage at minimum expected demand and minimum permissible voltage at maximum expected demand. As soon as generation reverses the power flow, or even reduces net demand below the design level, legal voltage limits will be exceeded.

20 There are already isolated occurrences of voltage (rise) complaints associated with micro-generation from CE customers; the issue has also been raised for merchant generators[13].

21 Mott MacDonald's System Implications of Additional Micro-Generation (SIAM) report identified voltage rise as the key constraint arising from micro-generation. That report suggested that penetration levels of up to 50% could be accommodated without modification, and levels of up to 100% could be accepted with only minor modifications. . It has also been suggested that 18% domestic penetration could easily be accommodated by the 'Accommodating Distributed Generation' report published alongside the Energy Review in 2006. However this report assumes the embedded generation is distribution across the distribution network and does not consider clusters or pockets of micro-generation technologies. Other studies focusing on particular types of micro generation have given a range of permissible penetration rates such as from 5[14]-50[15]% for PV.

22 For significant levels of generation, the size of the generation power flow can exceed the size of the load power flow, which will tend to create a new thermal constraint.

23 We suspect that Zero-Carbon Homes (ZCH), likely to be built in increasing numbers as the statutory requirement for all homes to be built to the standard from 2016 looms, may also give rise to thermal overload. The high energy efficiency measures required for these homes mean their electrical load will be low. Conversely, the amount of generation required to achieve carbon neutrality will be relatively high. Thus, the dominant power flow may become generation rather than load. Therefore, thermal overload may become a generation rather than a load issue.

---

[10] Market outlook to 2022 for battery electric vehicles and plug-in hybrid electric vehicles (2009) AEA Report
[11] High density micro-generation in the UK distribution networks (2008) M.Thomson
[12] PB Power (2005) Future Energy Solutions, Network Voltage Change and Reverse Power Flow with Distributed Generation
[13] Voltage rise: the big issue when connecting embedded generation to long 11 kV overhead lines. (2002) Masters CL
[14] A study of dispersed PV generation on the PSO system (1988) J.Ramakumar & R, Hill
[15]. Impact of widespread photovoltaics generation on distribution systems (2007) Thomson M, Infield D

24 Even through energy efficiency measures reduce load from existing building stock, the existing networks serving those properties have been laid down for the larger existing loads and are therefore less likely to suffer thermal overload from micro-generation.

25 Similar issues arise for the small commercial sector.

26 Micro-generation can make a contribution to system security by offsetting peak load. However, the interface technology used is generally not resilient to system disturbances. Therefore network planners must:

- Understand the load masked by generation under normal running; and
- Discount the contribution to system security from generation by an appropriate factor to reflect the risk of loss of infeed.

27 There are also concerns, borne of previous experience of similar technologies, over adverse power quality issues from significant penetration levels of micro-generation. This includes:

- Harmonics, poor power factor and DC offset from inverters; and
- Flicker from generation cycling on and off.

28 Heat pumps and electric vehicle chargers are large loads at the domestic/small commercial scale, which will therefore have a significant impact on voltage fall and thermal overload. Networks serving domestic customers without existing electric heating will have been designed for diversified maximum demand of the order of 1.5 kW. Adding 3-4 kWe heat pumps or 3-7 kW EV chargers is a significant increase in load, which will create new voltage and thermal constraints.

29 There is some debate over whether heat pumps or EV chargers have the greater impact. In the long run, we expect the per-installation impact to be similar. While EV chargers may have a higher installed capacity, there is more scope to move that load away from general system peak (although this is an assumption we will begin to test in this pilot). However, the debate seems to us largely irrelevant. Both technologies have significant disruptive potential, and both deserve investigation. The only factor relevant to defining test cells is the number of customers likely to adopt these technologies in the next few years.

30 There are also concerns, borne of early adoption of heat pumps in particular, over adverse power quality issues from these new loads. This includes:

- Harmonics, poor power factor and DC offset from inverters; and
- Flicker from heat pumps and EV chargers cycling on and off.

31 Load profiles used by distributors are based on assumptions and profile data that are over thirty years old[16]. In order to assess the impact of future load and generation, monitoring is required to establish current load profiles, which requires detailed analysis of existing customers. While energy efficiency measures may lead to alteration of current load profiles it is expected that future load profiles are likely to be highly influenced by new loads such as electric vehicles and heat pumps.

[16] ACE 49 Report

4.2.4 Definition and Number of Test Cells

32 Test cells are defined by the learning outcome sought, the solutions to be deployed and the detailed choices customers make. Here, we focus on understanding current and likely future profiles, so there are no solutions to be deployed, only monitoring.

33 For the learning gained to be as widely applicable as possible, our findings need to be statistically robust. This requires a reasonable number of customers in each test cell element. Some differentiation of standard profiles is valuable when trying to extract the last 10% of capacity from any given network, as load flow projections can be tailored to the local customer mix. Therefore, some resolution of customer types is required. This principle is already embedded in ACE49, although that research is now thirty years out of date.

34 There is no need for statistical analysis of network response. Instead, we will use modelling, simulation and emulation to generate learning that can be applied to a wide range of networks. This will be verified through monitoring a small number of clusters. This also allows learning to be generated for factors that cannot so readily be modelled, such as the interaction of power quality issues.

35 To project likely future load curves, we need to establish how each significant component contributes to the overall load curve. We can then project each forward separately, taking account of influences such as the banning of incandescent lightbulbs, the increasing efficiency of individual appliances, and the likely continued increase in consumer electronics. In addition, we can separately monitor the additional impact of new individual disruptive loads, such as heat pumps or PV.

36 Beyond the mass market, customers are less homogenous and network design relies more upon measured values than projected profiles. Some analysis of HH (half-hourly metered) customers is nevertheless valuable, specifically to investigate:

- The impact of the April 2010 CDCM[17] DUoS (Distribution Use of System) tariff change, to see whether these sharper price signals have had any identifiable impact on demand. This will inform the application of sharper tariffs to other groups, and also inform ancillary services contracts with individual I&C customers;

- What trends will influence the overall shape of I&C profiles, to support long-range network planning; and

- The contribution to system security that embedded generation can be expected to make, increasing the evidence base to support ER P2 (security of supply) and ETR 130.

37 We will make use of data readily to hand, which will allow us to begin generating knowledge very early in the Project. Our start point will include:

- Customers from BG's ongoing smart meter programme, from whom we will select a subset of around 11,250 (allowing for drop-out) to support our learning outcomes. We will have around half of the required volume at the required mix at the project start date, and will recruit the remainder through early 2011.

[17] Common Distribution Charging Method: as the name suggests, a tariff model common to the GB ex-Area Board distributors, with rigid governance. First applied from April 2010, one feature is a sharply differentiated three-rate time of use tariff for HH customers.

- We will not replicate the EDRP (Energy Demand Research Project) work, as our customer profiling is to a different specification. We will review the report's conclusions to avoid overlap and inform detailed test cell design;

- 14,000 existing NEDL/YEDL HH load customers. One full year's data on the new tariff structure will be available in April 2011; and

- 230 existing NEDL/YEDL HH generation customers. One full year's data on the new tariff structure will be available in April 2011.

38 We will then build on this by engaging a further 6,000 customers (allowing for drop-out) for the specific test cells, of which around 1,700 support this first Learning Outcome.

39 All this gives the following high-level breakdown

Customer type	HH metering	Net flow at meter plus six key components, 10-min interval	Net flow at meter plus one key component, 10-min interval	Network impacts, 10-min interval
Regular mass market	X	X		
Domestic heat pumps			X	X
Domestic PV			X	X
Domestic EV			X	X
Domestic CHP			X	X
I&C load	X			
HH generation	X			

40 Detailed customer profiling may be provided through extended smart meter spec, specifically by replicating multiple FIT generation meters, or by separate devices if this is not feasible. FIT administration requires import/export at the cut-out on the main meter, but also export measurement at the generating set remote from the main meter. The generation meter is required by the DECC/Ofgem spec to be logged at the main smart meter. We shall exploit this technology to monitor major power flows within the premises

41 Two types of cluster exist:

- For profiling network response to general electrical characteristics, to which customers are largely blind, no novel commercial proposition is involved, and customers need not be tied to any one supplier, discussed in this section on current & emerging characteristics; and

- For verifying closed customer and network response to direct control of key loads, discussed in the next section on customer flexibility. This requires a novel commercial proposition so, for the purposes of this exercise, all engaged customers need to be supplied by BG.

42 This leads to the following test cells:

1. <u>Basic profiling of regular smart meter customers:</u>

- This group will be selected to have no disruptive load, nor even electric heating. We may monitor smart gas meters in parallel to gauge heat load, but we make no assumption that this group need be on mains gas;

- Half-hourly kWh data from smart meters. This test cell seeks a high resolution of disaggregated customer types rather than high resolution of consumption for a more aggregated view of customers. While our focus will be on the North East and Yorkshire, we have access to BG's national data set and will ensure that our results can be scaled up to the national level;

- Three locations (urban, suburban, rural);

- Twenty domestic customer types, defined to test in detail socio-economic and demographic factors (age, ethnicity, socio-economic status) and socio-technical factors (diverse building stocks etc.). Our intent is that at least one of these groups will address fuel poverty; and

- Small commercial.

2. <u>Enhanced profiling of regular smart meter customers:</u>

- At 10-min interval (each by average, max/min (quantum and time):
  - Voltage;
  - Current;
  - Phase angle (and hence power factor, real/apparent/reactive power);
  - THD (total harmonic distortion); and
  - Premises total plus six key extra disaggregated flows, cf FIT generation meter[18].

- Project each consumption component forward using DECC 2050 pathways and similar published work, to re-aggregate robust ACE49 equivalent profiles; and

- This cell seeks to set a baseline from the large control group of BG smart meter customers without disruptive technologies or novel commercial propositions. We recognise that smart meter roll-out will change patterns of behaviour from what they are now. However, as universal smart metering has been mandated, we are confident both that this is the new baseline for customers generally, and also that it represents a reasonable baseline for this programme by presenting a set of customers who are more energy-aware but who otherwise do not participate in the management of the electrical power system.

3. <u>Enhanced profiling heat pumps (HP) on flat-rate tariff:</u>

- Key point of interest is new disruptive power flow, and other general load requires comparison only of that sub-total against the previously-discussed detailed analysis of the same consumption for regular domestic customers. We assume here that the installation of a heat pump does not affect consumption on lighting, white goods, etc. However, we will still split out the general domestic load, so we can compare the overall profile to the more detailed analysis from cell 2. If this shows a marked difference, we will expand the pilot to investigate further;

[18] A requirement of feed-in tariffs is that the generator is metered separately before it is connected to the general system within the premises. The DECC/Ofgem and BG smart meter specifications both recognise this need, and show the generation meter as an element discrete from the smart meter, connected to it through the HAN (Home Area Network)

- At 10-min interval (each by average, max/min (quantum and time):
  - Voltage;
  - Current;
  - Phase angle (and hence power factor, real/apparent/reactive power);
  - THD (total harmonic distortion); and
  - Premises total plus one key extra disaggregated flows, cf FIT generation meter.

- Here, customer type is less important than heat pump technology, where we shall assume four types (details tbc, but to focus on electrical characteristics such a start-up current and cycling, specifically including ancillary heaters);

- Although we will focus on the North-East and Yorkshire, we can use national data if required to top up the numbers and ensure nationally-applicable learning; and

- This cell will include network monitoring where customers are clustered: 9 such clusters shall be selected to cover geography and heat pump technology. We expect that this will lead to an enhanced instrumentation fit for selected substations as part of the new business as usual.

4. <u>Enhanced profiling µCHP on flat-rate tariff:</u>

- The key point of interest is new disruptive power flow, and other general load requires comparison only of that sub-total against the previously-discussed detailed analysis of the same consumption for regular domestic customers. We assume here that the installation of a heat pump does not affect consumption on lighting, white goods, etc. However, we will still split out the general domestic load, so we can compare the overall profile to the more detailed analysis from cell 2. If this shows a marked difference, we will expand the pilot to investigate further.

- At 10-min interval (each by average, max/min (quantum and time):
  - Voltage;
  - Current;
  - Phase angle (and hence power factor, real/apparent/reactive power);
  - THD (total harmonic distortion); and
  - Premises total plus one key extra disaggregated flows, cf FIT generation meter.

- CE's share of the 30,000 FIT pilot schemes is around 4,000 homes; BG's share of that is around 800 homes. However, it is unlikely that fuel cells (the likely enduring technology) will be available in significant numbers before 2013. This gives limited scope to select by building and customer type, although this information will be recorded to form part of the subsequent analysis.

5. <u>Enhanced profiling PV:</u>

- Key point of interest is new disruptive power flow, and other general load requires comparison only of total against more detailed analysis of regular domestic customers. We assume here that the installation of PV does not affect consumption on lighting, white goods, etc. However, we will still split out the general domestic load, so we can compare the overall profile to the more detailed analysis from cell 2. If this shows a marked difference, we will expand the pilot to investigate further;

- At 10-min interval (each by average, max/min (quantum and time):
  - Voltage;
  - Current;
  - Phase angle (and hence power factor, real/apparent/reactive power);
  - THD (total harmonic distortion); and
  - Premises total plus one key extra disaggregated flows, cf FIT generation meter

- Demographic group is largely irrelevant, as PV output is independent of customer behaviour, so single test cell; and

- This cell will include network monitoring where customers are clustered. We expect that this will lead to an enhanced instrumentation fit for (selected) substations as part of the new business as usual. We will also explore how DG output can be aggregated and presented to Control.

6. <u>Enhanced profiling EV on flat-rate tariff:</u>

- Key point of interest is new disruptive power flow, and other general load requires comparison only of total against more detailed analysis of regular domestic customers. We assume here that the purchase of EV does not affect consumption on lighting, white goods, etc. However, we will still split out the general domestic load, so we can compare the overall profile to the more detailed analysis from cell 2. If this shows a marked difference, we will expand the pilot to investigate further;

- At 10-min interval (each by average, max/min (quantum and time):
  - Voltage;
  - Current;
  - Phase angle (and hence power factor, real/apparent/reactive power);
  - THD (total harmonic distortion); and
  - Premises total plus one key extra disaggregated flows, cf FIT generation meter.

- We will continue to engage with EV initiatives from government or manufacturers, to secure a reasonable sample; and

- Some such customer profiling may be required for non-BG customers; it is assumed here that the costs will be similar[19].

7. <u>Understand impact of April 2010 tariff reform:</u>

- 14,000 (5,500 NEDL, 8,000 YEDL) I&C HH customers;

- The current Common Distribution Charging Methodology (CDCM) brought in strong time of use signals for half-hourly (HH) metered customers from April 2010;

- We can compare before and after patterns for each HH customer, although we will then need to isolate other influencing factors. This will inform the wider debate on price elasticity; and

[19] Or that NEDL/YEDL will administer a common system for BG and non-BG customers, protecting the data of non-BG customers in particular

- We will also review higher-level demand and energy trends over the last decade, to establish the degree to which effective demand forecasting is possible.

8. Profiling for generation under smart tariffs:

- Any significant generation will already have half-hourly metering;
- 250 (already 98 NEDL, 130 YEDL);
- Output curves require analysis to understand the contribution to system security, to inform network design and pricing; and
- As these customers generally enjoy the rebates of the 2010 CDCM, they already enjoy smart tariffs. As for load, there is scope to compare before and after patterns, to gauge the impact of smart tariffs for wider application.

4.3 Learning Outcome 2: to what extent are customers flexible in their load and generation, and what is the cost of this flexibility

4.3.1 Detailed outcomes

43 In seeking better to understand customer flexibility, the key questions that emerge are:

- Learning Outcome2a: to what extent is load flexible and what is the cost of this flexibility?

- Learning Outcome2b: to what extent is generation flexible and what is the cost of its flexibility?

44 We already understand the value to networks of flexibility, which we can express in terms of reinforcement deferred.

45 We want to understand the degree to which:

- Customers accept propositions for flexibility, from time of use tariffs to direct control. These propositions will cover both connections charges and ongoing tariffs; and

- Customers who have accepted a proposition for flexibility then respond.

46 That is, we want to know how much flexibility is available and how much it will cost. This will allow us to compare non-network and network solutions to increasing headroom. We will first be able to see if non-network solutions are sufficient, i.e. they can create enough headroom to defer reinforcement for 5-10 years, then be able to judge they are also efficient, i.e. their cost is less than the value of deferred reinforcement.

4.3.2 Drivers

47 This section demonstrates the value of distributors and suppliers collaborating to engage customer participation, which includes:

- Combining distribution and supply (generation, transmission, etc.) costs to give a larger price signal to customers than can be derived from distribution costs alone. We expect this to yield a greater level of customer response than from DUoS signals alone[20];

- Sharing a fast reserve[21]-like resource[22]. For example, a supplier might contract with customers for 100 MW of fast reserve-like resource within a given area. The dominant distributor in that group might also require 100 MW of fast reserve-like resource but, if that need is related to outages at HV and above, might need to access perhaps only 10 MW at any one time. We do not expect large parts of the network to be on single-circuit security at the same time, so we would not call all the contracted resource simultaneously. This creates the opportunity for distributors to access fast reserve-like resource at

[20] Demand Side Response (July 2010) OFGEM Discussion Paper

[21] Fast Reserve is an ancillary service procured by the Transmission System Operator for national energy balancing. The requirement is to shed load or bring on generation within 2 minutes and sustain that response for at least 15 minutes. The distribution network requirement for response requires the same lead-in time, but durations typically of 3 hours. There is a related service of Short-Term Operating Reserve, which has a 4 hour maximum lead-in time and a 2 hour minimum duration: the lead-in times are too long for most distribution network applications

[22] Demand Side Manage: Benefits and Challenges (2008) Goran Strbac

a discount to what they might have to pay if approaching customers directly, and for customers to see a higher price (and therefore being more willing to participate) from the combination of supplier/TSO Transmission System Operator) and distributor benefits; and

- Generally, the needs of local networks and national energy balancing have to be reconciled for a solution that is economic and efficient overall. Post- NETA[23], suppliers have become the primary energy balancers. If distributors were to control demand response on any significant scale without engaging suppliers, it would threaten the latters' ability to balance their portfolios. This would increase the need for the TSO to contract for reserve, increasing costs to customers.

48 The need to engage customer flexibility has been discussed most recently in, OFGEM Demand Side Response paper and is following the trend in increasing interest in demand side activities and active network management to elevate future network constraints[24]. There is also growing awareness that greater consumer understanding is required to fully utilise the potential of demand side participation[25]. Smart meters offer the potential to unlock some of the barriers to mass demand side participation, either through direct load control of appliances[26] or through new tariff structures[27].

49 The opportunity to establish customer flexibility is created by:

- Smart metering roll-out, with DR (demand response) capability built into both the BG and DECC/Ofgem specifications;
- Increasing sophistication of I&C building energy management systems, driven in part by CRC-EES;
- Smart appliances;
- New and potentially controllable domestic loads, such as heat pumps (stimulated by RHI) and electric vehicles;
- A significant increase in distributed generation, stimulated by FIT, with the potential for aggregation and control.
- There are drivers for customers to self-organise to balance load and generation locally, including:
- The desire of communities to establish commonly-owned renewable generation and use its output locally[28]; and
- The structure of FITs, which encourages individual customers to use the output of their qualifying generation on site, because the extra credit for export is much less than typical prices for import.

[23] New Electricity Trading Arrangements: as the name suggests, a wholesale market introduced to replace the central buyer Electricity Pool. One key feature is that there is no central clearing house for wholesale energy. Suppliers are the primary balancers, responsible for balancing their own production and consumption accounts, and financially penalised should they fail to do so. The TSO acts only as a balancer of last resort, taking actions when suppliers fail to balance their positions, and thereby contracting for relatively little generation themselves.
[24] Demand Side Response (July 2010) OFGEM Discussion Paper
[25] The human angle. Presentation to Electricity Networks Strategy-Group seminar on electricity demand-side management for small consumers (2006) Jardine C
[26] Get Smart: Consumer acceptance and restrictions of Smart domestic appliances in sustainable energy systems (2009 W.Mertz & W.Tritthart
[27] Towards sustainable energy tariffs (2008) Centre of Sustainable energy
[28] DTI, (2000) Community involvement in renewable energy projects—a guide for community groups.. Also DTI, (2006).Our Energy Challenge: Power from the People Microgeneration Strategy..

4.3.3 Test Cell Definition

4.3.3.1 Network Impacts

50 Reducing the scale of any dominant power flow will ease voltage and thermal constraints. Increasing any countervailing flow, e.g. increasing demand on a generation-rich feeder, will have the same effect.

51 Frequency sensitive controls are of no direct relevance to interconnected distribution systems, and will not be explored here, but their contributions to islanded micro-grids[29] may justify inclusion in a later stage of the programme. Instead, reducing duty cycles and advancing or deferring consumption will be considered here. Smart appliances create opportunities to move load to absorb generation and to reduce aggregate load[30]. Immersion heaters can be despatched on to absorb generation[31].

52 As discussed under Learning Outcome 1, heat pumps and electric vehicle chargers are large loads at the domestic/small commercial scale. There is an opportunity to influence the way in which customers adopt these new technologies, with the potential for significant volumes of responsive load. The scope for response may be different between the two technologies, which we will explore in this Project.

53 Micro-generation can make a contribution to system security by offsetting peak load. However, the interface technology used is generally not resilient to system disturbances. Therefore network planners must:

- Understand the load masked by generation under normal running; and
- Discount the contribution to system security from generation by an appropriate factor to reflect the risk of loss of infeed.

54 Merchant generation can make a material contribution to system security by offsetting peak load, particularly where the interface is resilient to system disturbances. I&C customers can reduce their individual impact by deferring load or increasing generation. This last might include running previously stand-by generation in parallel on request.

55 All this creates a fast reserve-like resource, valuable to both suppliers/TSO and to distributors.

56 Some of this resource can be considered as energy storage. Immersion heaters and well insulated buildings create thermal energy stores, so that electrical off-take can be advanced without significantly affecting the provision of heat. Similarly, batteries such as EVs or even laptops create chemical energy stores, again allowing electrical off-take to be advanced.

4.3.3.2 Solutions

[29] Micro-grids generally, including those that retain a weak connection to the general public network, will be considered later. Direct load control is a key enabling technology for micro-grids that will be explored within this pilot

[30] Synergy Potential of Smart Appliances (2008) D2.3 of WP 2 from the Intelligent Energy Europe Smart-A project , R. Stamminger

[31] Storage and immersion heaters have been used in the past to implement demand side management schemes, examples such as, Demand for Wind; maximising the value of wind power through demand side management (2008) P. Taylor et al. and Innovative approaches to verifying demand response of water heater load control (2006). Grayson,et al.

57 This sub-section explores the range of solutions to exploit the impacts described above. As with that impacts sub-section, here we lay out the range of options, then explain why we will focus on a sub-set thereof. This sub-section describes:

- Non-network solutions, such as offering customers a time of use tariff to which they may choose to respond. This also covers tools within the home to help customers exercise that choice; and

- Hybrid solutions that encompass both network and non-network techniques. Here, we combine network elements such as RTTR (real-time thermal rating) with customer elements such as direct control, all supported by a suitable commercial proposition.

4.3.4 Non Network Solution(s)

4.3.4.1 Range of Non-Network Solutions

58 Customer engagement takes a number of forms, but the solutions we present to customers will largely be defined in terms of the level of financial incentive offered to consumers relative to their annual expenditure on domestic energy. This will be tested against the range of demographic profiles, with and without a level of community engagement where appropriate (in urban and where possible in smaller rural communities).

59 The level of financial incentive will be a combination of the following:

- Reduced connection charges, or a tariff based incentive, for use of the deployed in-home technology as part of a demand response programme; and

- The level of penalty, where applied, for manual over-ride of a demand response trigger.

60 We do not intend to explore the impact of different financing models in the take-up of each technology, and will therefore not offer robust proof of how income streams from demand response programmes may accelerate the uptake of lower carbon technologies.

61 Part of the current Common Distribution Charging Methodology (CDCM) is strong time of use signals, although limited to the (larger[32]) half-hourly (HH) metered customers. There is scope to apply the same three-rate tariff to smaller customers, through either full HH metering or sharper NHH (non-half-hourly) DUoS tariffs. Yet more innovative approaches will also be explored during the pilot.

62 For I&C customers, there is also scope to enter into bespoke ancillary services contracts, if CDCM prices do not fully reflect the marginal value of deferred reinforcement[33]. This might reflect:

- Deferring demand;

- Advancing generation; or

[32] The limit for mandatory half-hourly import metering is currently 100kWe, although there are I&C customers with HH metering and lower loads

[33] Winter Peak Demand Reduction Scheme – Ireland (2003) dsm.iea.org/ViewTask.aspx?ID=16&Task=15 reported a peak load reduction of 80MW

- Customer-side storage.

63 These price signals for time of use of the distribution network need to be combined with wholesale and TNUoS costs, and choices for funding the installation of heat pumps &c., to form an overall proposition for the customer. There are challenges in reconciling energy services packages from supplier to customer with time of use signals, which will be explored within this phase of the programme.

64 We need to consider the level of price signal that is required to engage customers and which is reasonably reflective of likely future energy costs. This may not reflect current cost structures, so some form of subsidy may be required for the purpose of this pilot.

65 As with any non-network solution, the customer proposition is the key to success. We are unsure of the degree of customer response, but the ability of networks to accept low- and zero-carbon load such as heat pumps and EV charging is so important to the transition to a low-carbon economy that the issue demands exploration. Customers' willingness to defer EV charging as against heat pump operation may be very different, but each needs to be explored.

66 We can:

- Send a pure economic signal through a supply time of use tariff, with or without providing customers with the tools to respond to such signals;

- Replicate current restricted hours heating arrangement by arranging to control selected circuits from the smart metering system on timebands controlled by the supplier (but where the customer opts for such a tariff), with or without customer over-ride; or

- Modify appliance controls to respond to external signals (direct control), with or without customer over-ride.

67 These solutions are described in more detail in "components" earlier.

4.3.4.2 Non-Network Solutions to be Addressed

68 Primarily to restrict the range of test cells, we will focus here on:

- A pure economic signal through a supply time of use tariff, reflecting a distribution ToU tariff and other supply costs. We will also provide customers with some intelligence in the home to control discretionary load and respond to such signals: the degree of response will be driven entirely by customer preference;

- A restricted hours tariff with customer over-ride, reflecting the most sophisticated incarnation of current energy tariffs. Customers remain in control. We help them respond to tariff signals by creating a default arrangement that certain loads are restricted in operation, but leave them an over-ride facility. This default setting should increase the response delivered. A key learning point for distributors is the confidence we can have in how often the default energy patterns are over-ridden; and

- Direct control without customer over-ride. To leave customers in overall control, this has to be an opt-in solution. The distinction from the restricted hours tariff stems from:
    - The greater confidence that distributors may be able to gain from the absence of a customer over-ride, making response more certain; and
    - Being able to call a response on demand, rather than the day-in, day-out response of tariff-like propositions. This is likely to be called relatively infrequently, e.g. for worst-case circuit outages, so customers may be prepared to make a greater depth of response available.

69 We will apply these influences to:

- Smart white goods;
- Immersion heaters;
- Smart heat pump thermostats;
- CHP; and
- EV chargers.

70 In each case, the cells will be made up of BG customers. Customers react to the end tariff, which reflects suppliers' costs. Therefore, distributors must work with suppliers to create an overall proposition that will test customer response.

71 This approach also lets us set distribution costs in the wider context. Where local system peak coincides with national system peak (or cost signals otherwise coincide), there is a virtuous harmony, and the price signal to the customer is greater than the distributor could achieve alone. Conversely, where the cost signals do not coincide, we can identify where networks must flex to meet the needs of the wider low-carbon economy.

4.3.5 Hybrid Non-Network and Network Solutions

72 This sub-section considers the combined application of non-network and network solutions.

4.3.5.1 Range of Hybrid Solutions

73 Strictly, the direct control solution outlined earlier is a hybrid solution. It requires a network element to recognise a potential capacity shortfall, and a customer element to respond to that call by changing power flows and creating more headroom.

74 There is scope to create an interruptible DUoS tariff, or establish ancillary services payments, to reflect the network benefits of responsive load and generation. If expressed as a flat annual rate, this may be easier to reconcile with an energy services package from supplier to customer.

75 Although real-time thermal rating systems can provide better data on network response to inform smarter network design, their main benefit comes when linked to responsive generation (or load).

76 Conversely, EAVC (enhanced automatic voltage control) can exist as a background network solution, but also be linked to call demand response. For example, a unit might run out of taps; or a primary EAVC controller may be unable to resolve the conflict between low voltage on a heavily-loaded feeder and high voltage on a generation-rich feeder, where trimming one of the offending power flows may be the only way to maintain voltage within statutory limits.

77 There is theoretically scope to modify heat pump controls (e.g. smart thermostats) and EV chargers to respond to external control signals. We assume here that no customer over-ride will be permitted, in contrast to tariff-like solutions, on the basis that certainty of response is required.

78 Micro-grids and virtual power plants are potentially powerful tools to address both energy and locals network balancing issues. As they work better with high penetration of responsive load and generation, they shall be deferred to a later Project within the wider programme.

79 These solutions are described in more detail in “components” earlier.

4.3.5.2 Hybrid Solutions to be Addressed

80 Some combinations of non-network and network solutions are essentially independent, such as time of use tariffs and EAVC. Their impact can therefore robustly be modelled, rather than requiring test cells in the field. More relevant areas to test seem to be where the deployment of a network solution is, at least in part, dependant on a non-network solution and some commercial proposition that marries the two.

81 The combinations most likely to succeed seem to be EAVC and/or RTTR combined with responsive load

4.3.6 Definition and Number of Test Cells

82 We will build on, rather than replicate, EDRP. That project considers customer response to:

- Smart meters with a remote visual display of consumption and cost information of energy used for both electricity and gas;
- Smart meters with daily consumption information sent to the households’ TV;
- Smart meters with daily consumption information available on the internet;
- Smart meters linked to heat control units which allows customers to control their boiler through a wall panel whilst having access to accurate electricity and gas consumption data;
- Smart meters with an alarm which alerts the user to certain electricity consumption levels (load limiting alarm);
- Smart meters with a [sic] energy savings reward tariff which rewards the user for limiting their energy use; and

- Smart meters with a time of day tariff which rewards the user if they move their consumption to 'off peak' hours (for example by running the dishwasher overnight)[34].

83 Here, we focus on understanding:

- The impact of connection charges as part of the customer proposition, as well as tariff benefits;

- More sophisticated restricted hours and time of use tariffs, developed cooperatively by distributors and suppliers;

- Direct control propositions, where we combine customer and network flexibility; and

- Different responses of different customer groups to different commercial propositions with different customer technologies, specifically heat pumps and EV charging as well as general domestic load.

84 In general, the phases of customer engagement discussed in this section are:

- Tariff-like solutions to create a day-in, day-out response with no external intervention other than (possibly) providing real-time price signals. These include:

    - Pure economic ToU (time of use) signals, giving customers total discretion on how to respond;
    - Restricted hours tariffs, where key loads are switched according to tariff timeband, with customer over-ride. This creates a default mode of operation for key loads, also leaving customers discretion to alter those patterns, likely also accepting a financial penalty for doing so;
    - Open-loop direct control of customers dispersed across the network. We seek an aggregate load reduction, so reducing any given load rather than interrupting it is still valuable; and
    - Closed-loop direct control of customers clustered together (on the same LV feeder).

85 In all but the last instance, we seek to explore customer behaviour. Therefore, we need statistically significant numbers of customers in each test cell.

86 We could simply model the aggregate impact on the network of virtual clusters of customers. However, the demonstration will be more powerful if we can close the loop with real clusters of customers. For both EAVC and RTTR, we can then follow the process of headroom deteriorating in real time; network controls recognising the emerging constraint and calling for response; customers responding to ease the constraint; and network headroom being restored.

87 Even so, the final closed-loop cell is relatively small. We will explore customer behaviour at statistically significant levels in the preceding open-loop cell, as there is no difference to customers whether or not the loop is closed. In these tests of physical network response, because those responses are predictable, we do not need large sample sizes. Instead, the test cells aim to confirm the outputs of our modelling: we're testing the models, not the network.

88 Two types of cluster exist:

[34] Section 3.3, page 4, Energy Demand Research Project: Review of progress for the period March 2009 – September 2009 (Ofgem, March 2010)

- Discussed in the previous section on current & emerging characteristics, for profiling network response to general electrical characteristics, to which customers are largely blind, no novel commercial proposition is involved, and customers need not be tied to any one supplier; and

- Discussed in this section on customer flexibility, for verifying closed customer and network response to direct control of key loads. This requires a novel commercial proposition so, for the purposes of this exercise, all engaged customers need to be supplied by BG.

89 We will not place customers at risk from new technologies. Therefore, we will work on networks that are fundamentally sound, and synthesize constraints by calibrating the network controls to artificially tight bands, for example by setting voltage limits to 230V +5%/-3% rather than the +10%/-6% permissible by law. We will not impose restrictions on any customers. Direct load control will be applied strictly on an informed opt-in basis with easy opt-out. All other customers will see no adverse impact from this pilot.

90 As previously discussed, both suppliers and distributors may have cause to call direct control. For distributors in particular, it is important to understand the confidence we can place on restricted hours tariffs with customer over-ride against direct control where we assume no customer over-ride.

91 It will also be valuable to understand how readily customers take up these commercial propositions, to gauge how viable each tool is.

92 As previously discussed, we expect to engage statistically significant groups of domestic customers with discretionary load from smart appliances and heat pumps. We expect take-up of domestic PV under FIT to be significant: while we do not expect PV itself to be flexible, we do expect to engage a reasonable number of customers prepared to control their own smart appliances to absorb the output of their own PV.

93 We will continue to engage with EV initiatives from government or manufacturers, to secure as many participating customers as we can.

94 We will also seek to engage larger customers, specifically:

- Merchant DG with standing constraints (e.g. to maintain a given voltage) for network support;

- Merchant DG with direct control to alleviate constraints; and

- I&C with direct control to alleviate constraints.

95 As customers of this type are heterogeneous, these tests will largely be proof of the commercial concept, that it is economically viable for all parties (customer, supplier and distributor) to strike contracts for response. To increase learning for distributors, we will seek to engage DG and I&C customers with enough response to drive a measurable response at EHV (i.e. 5-10 MW), to close the loop on primary EAVC & RTTR schemes.

96 This gives the following likely combinations:

	pure economic ToU supply tariff	restricted hours supply tariff	direct control	standing constraints	within-premises balancing
general domestic customers, dispersed	X	X	X		
small commercial customers, dispersed	X	X	X		
domestic customers, HP, dispersed	X	X	X		
domestic customers in clusters, HP			X		
domestic customers, CHP, dispersed					
domestic customers in clusters, CHP					
domestic customers, PV, dispersed					
domestic customers, PV and responsive load, dispersed					X
domestic customers in clusters, PV					
domestic customers, EV, dispersed	X	X	X		
domestic customers in clusters, EV					
merchant generators			X	X	
I&C			X		

97 From this we can describe in detail the following test cells, following on from the number sequence under Learning Outcome 1 to reduce confusion:

9. <u>Pure ToU tariff, general load:</u>

- For domestic customers, this will likely be white goods and immersion heaters. For small commercial customers, this will likely be air-conditioning and refrigeration;

- A combined commercial proposition is developed reflecting cost of service according to the three timebands of the current HH DUoS tariff;

- Four domestic customer types, defined to test at a high level the socio-economic and demographic factors (age, ethnicity, socio-economic status) and socio-technical factors (diverse building stocks etc.) most likely to affect take-up rate of and response to new commercial propositions. We expect that relatively few factors will have a material effect on customer response compared to those that affect consumption generally, so we will aggregate up from the sixty groups tested in cell 1. Our intent is that at least one of these groups will address fuel poverty; and

- Customers are provided with assistance to respond to these tariff signals, e.g. home hub with smart appliances and/or smart plugs.

10. <u>Restricted hours tariff, general load:</u>

- A combined commercial proposition is developed reflecting cost of service according to a restricted hours tariff akin to economy seven;

- Four domestic customer types, defined to test at a high level the socio-economic and demographic factors (age, ethnicity, socio-economic status) and socio-technical factors (diverse building stocks etc.) most likely to affect take-up rate of and response to new commercial propositions. We expect that relatively few factors will have a material effect on customer response compared to those that affect consumption generally, so we will aggregate up from the sixty groups tested in cell 1. Our intent is that at least one of these groups will address fuel poverty; and

- Customers are provided with assistance to respond to the general tariff signals, e.g. home hub with smart appliances and/or smart plugs; and

- Key loads, e.g. immersion heaters, are driven directly from the smart metering system according to tariff timebands, with customer over-ride.

11. <u>Direct control, general load:</u>

- A combined commercial proposition is developed reflecting cost of service according to a restricted hours tariff akin to economy seven, with an additional discount reflecting the benefit to supplier/TSO and distributor of a further level of externally-controlled response;

- Four domestic customer types, defined to test at a high level the socio-economic and demographic factors (age, ethnicity, socio-economic status) and socio-technical factors (diverse building stocks etc.) most likely to affect take-up rate of and response to new commercial propositions. We expect that relatively few factors will have a material effect on customer response compared to those that affect consumption generally, so we will aggregate up from the sixty groups tested in cell 1. Our intent is that at least one of these groups will address fuel poverty; and

- Customers are provided with assistance to respond to the general tariff signals, e.g. home hub with smart appliances and/or smart plugs; and

- Key loads, e.g. immersion heaters, are driven directly from the smart metering system according to:
  - Day-in, day-out tariff timebands, with customer over-ride; and
  - Infrequent dynamic external signals without customer over-ride.

12. <u>Pure ToU tariff, heat pumps:</u>

- A combined commercial proposition is developed reflecting cost of service according to the three timebands of the current HH DUoS tariff;

- No differentiation of customers, assuming insufficient numbers will be available during the pilot;

- Customers are provided with assistance to respond to these tariff signals, e.g. home hub with smart thermostat linked to tariff rate. This will reduce rather than interrupt this key load;

- Enhanced metering, measuring at 10-min interval each by average, max/min (quantum and time):
  - Voltage;
  - Current;
  - Phase angle (and hence power factor, real/apparent/reactive power);

- THD (total harmonic distortion); and
- Premises total plus one key extra disaggregated flows, cf FIT generation meter.

13. Restricted hours tariff, heat pumps:

- A combined commercial proposition is developed reflecting cost of service according to a restricted hours tariff akin to economy twenty[35];

- No differentiation of customers, assuming insufficient numbers will be available during the pilot;

- Customers are provided with assistance to respond to the general tariff signals, e.g. home hub with smart appliances and/or smart plugs:
  - One option, particularly to avoid ancillary heaters, is a heat pump/storage heater combination;

- The key heat pump load is driven directly from the smart metering system according to tariff timebands, with customer over-ride;

- Enhanced metering, measuring at 10-min interval (each by average, max/min (quantum and time):
  - Voltage;
  - Current;
  - Phase angle (and hence power factor, real/apparent/reactive power);
  - THD (total harmonic distortion); and
  - Premises total plus one key extra disaggregated flows, cf FIT generation meter.

14. Direct control, heat pumps:

- A combined commercial proposition is developed reflecting cost of service according to a restricted hours tariff akin to economy twenty, with an additional discount reflecting the benefit to supplier/TSO and distributor of a further level of externally-controlled response;

- No differentiation of customers, assuming insufficient numbers will be available during the pilot;

- Customers are provided with assistance to respond to the general tariff signals, e.g. home hub with Customers are provided with assistance to respond to the general tariff signals, e.g. home hub with smart appliances and/or smart plugs;

- The key heat pump load is driven directly from the smart metering system, likely on a smart thermostat (increasing the range of heat pumps to which it may be applied, reducing development costs and permitting retrofit) according to:
  - Day-in, day-out tariff timebands, with customer over-ride; and
  - Infrequent dynamic external signals without customer over-ride;

- Enhanced metering, measuring at 10-min interval (each by average, max/min (quantum and time):
  - Voltage;
  - Current;

[35] I.e. a tariff that precludes use of key loads during the early evening peak

- Phase angle (and hence power factor, real/apparent/reactive power);
- THD (total harmonic distortion); and
- Premises total plus one key extra disaggregated flows, cf FIT generation meter.

- This trial is applied to dispersed customers, for statistical analysis of customer response. The aggregate effect of hypothetical clusters is then modelled to demonstrate the likely value to distributors in deferring network reinforcement. Real clusters are then identified, and local active management (e.g. RTTR) applied with direct control to close the loop. This allows us to observe:

  - Network headroom being eroded;
  - The active network element calling for demand response;
  - Customers responding to relieve the constraint; and
  - Network headroom being restored.

- This can be driven by EAVC, RTTR or both. When applied to dispersed customers, this is a virtual experiment, so the active network element and the engaged customers can be located almost anywhere on the network.

15. <u>Pure ToU tariff, domestic EV:</u>

- A combined commercial proposition is developed reflecting cost of service according to the three timebands of the current HH DUoS tariff;

- No differentiation of customers, assuming insufficient numbers will be available during the pilot; and

- Customers are provided with assistance to respond to the general tariff signals, e.g. home hub with Customers are provided with assistance to respond to these tariff signals, e.g. home hub with smart charger linked to tariff rate.

16. <u>Restricted hours tariff, domestic EV:</u>

- A combined commercial proposition is developed reflecting cost of service according to a restricted hours tariff akin to economy seven;

- No differentiation of customers, assuming insufficient numbers will be available during the pilot;

- Customers are provided with assistance to respond to the general tariff signals, e.g. home hub with Customers are provided with assistance to respond to the general tariff signals, e.g. home hub with smart appliances and/or smart plugs;

- The key EV charging load is driven directly from the smart metering system, likely on a smart plug or 30A wired-in equivalent for 7kW chargers, according to tariff timebands, with customer over-ride;

- Enhanced metering, measuring at 10-min interval (each by average, max/min (quantum and time):
  - Voltage;
  - Current;
  - Phase angle (and hence power factor, real/apparent/reactive power);
  - THD (total harmonic distortion); and

- o Premises total plus one key extra disaggregated flows, cf FIT generation meter.

17. Direct control domestic EV:

- A combined commercial proposition is developed reflecting cost of service according to a restricted hours tariff akin to economy seven;

- No differentiation of customers, assuming insufficient numbers will be available during the pilot;

- Customers are provided with assistance to respond to the general tariff signals, e.g. home hub with Customers are provided with assistance to respond to the general tariff signals, e.g. home hub with smart appliances and/or smart plugs;

- The key EV charging load is driven directly from the smart metering system, likely on a smart plug or 30A wired-in equivalent for 7kW chargers, according to:
  - o Day-in, day-out tariff timebands, with customer over-ride; and
  - o Infrequent dynamic external signals without customer over-ride;

  Enhanced metering, measuring at 10-min interval each by average, max/min (quantum and time):
  - o Voltage;
  - o Current;
  - o Phase angle (and hence power factor, real/apparent/reactive power);
  - o THD (total harmonic distortion); and
  - o Premises total plus one key extra disaggregated flows, cf FIT generation meter.

18. Ancillary services (fast reserve) provision:

- A direct control proposition is designed to help I&C customers adapt their building energy management system (or equivalent) to create a controllable power flow, either increasing generation/reducing load or reducing generation/increasing load. For both energy balancing and network balancing, the means by which offtake is reduced is largely irrelevant;

- This may be driven by either EAVC, RTTR or both depending on local distribution network circumstances; and

- There could be half a dozen such cells, reflecting the range of customers that exists.

19. Ancillary services (voltage support) provision:

- A proposition is developed for I&C customers with sufficiently controllable generation, or merchant generators, to contribute to wide-area voltage control;

- In conjunction with EAVC schemes, the generator may be required to alter its mode of operation to support or reduce volts by modulating real and (particularly) reactive power; and

- Although the benefits accrue mainly to distributors, supplier involvement is still important. For example, we may place a collar (minimum export level) on a generator, reducing the contractual flexibility for its supplier.

20. Within-premises balancing:

- A proposition is designed to help the customer adapt their building energy management system (or equivalent) to optimise net export/import;

- This will likely be associated with some new plant, such as on-site renewables, where there is still value to the customer in maximising the energy produced that is consumed on site;

- The most likely such combination is domestic PV and responsive load such as (but not limited to) an immersion heater. The design of this cell will be informed by the general responsive load brought forward in cells **Error! Reference source not found.** to 11; and

- There is scope to include an autonomous voltage droop controller that increases load as observed voltage rises, and vice-versa. Interactions with such controls and EAVC must be measured, understood and managed.

4.4 Learning Outcome 3: To what extent is the network flexible and what is the cost of this flexibility?

4.4.1 Detailed outcomes

98 In seeking better to understand customer flexibility, the key questions that emerge are:

- What are the most effective interventions to deliver this flexibility?
- What is the unit cost of delivering flexibility by each intervention?
- How does the volume of flexibility and its cost differ by network topology?

99 We already understand the value to networks of flexibility, which we can express in terms of conventional reinforcement deferred.

100 This section considers two aspects of network flexibility:

- Background flexibility, invisible to the customer; and
- Identification of interruptible capacity that can be offered to customers, with means to interrupt that capacity as required. This last overlaps with customer flexibility, as interruptible contracts for non-firm network capacity are valuable only to customers with flexible demand.

101 Again, we want to know how much flexibility is available and how much it will cost. This will allow us to compare novel and conventional network solutions to increasing headroom. We will first be able to see if novel network solutions are sufficient, i.e. they can create enough headroom to defer reinforcement for 5-10 years, then be able to judge they are also efficient, i.e. their cost is less than the value of deferred conventional reinforcement.

102 This links to the assessment of future demand growth, and will likely have different outcomes on different parts of the network. A novel solution that increases headroom by 10% may be valuable on a primary substation where load growth is 1%/yr. It is less valuable when a heat pump scheme takes utilisation of a secondary transformer from 75% to a projected 150%

4.4.4.1 Solutions

103 This sub-section explores the range of solutions to exploit the impacts described above. As with that impacts sub-section, here we lay out the range of options, then explain why we will focus on a sub-set thereof. This sub-section describes:

- Network solutions operating in the background without direct reference to customers, such as enhanced voltage control. This also covers combinations of such background techniques; and
- Hybrid solutions that encompass both network and non-network techniques. Here, we combine network elements such as RTTR with customer elements such as direct control, all supported by a suitable commercial proposition.

104 Here, we will take components that individually have high Technology Readiness Levels (TRLs), and combine them in novel arrangements where the system's TRL is much lower.

4.4.4.2 Network Solution(s)

105 Enhanced AVC solutions have been developed[36,37], although using HV network references. Smart meters can provide LV network references.

106 ENW/Areva have developed an on-load tap-changer for secondary distribution (HV/LV) transformers[38], specifically to address issues of voltage rise associated with generation on LV feeders.

107 Various forms of voltage regulator are available, some intended primarily for customer-side power conditioning.

108 On-line applications of EATL's CRATER tool are available for real-time thermal rating of cables.

109 Real-time thermal rating tools have been applied to primary system transformers[39], and should be capable of modification for secondary transformers. There is a continuum of solutions:

- Predicting temperature from generic loadflows and generic ambient conditions;
- Predicting temperature from actual loadflows and generic ambient conditions;
- Predicting temperature from actual loadflows and regional actual ambient conditions;
- Predicting temperature from actual loadflows and local actual ambient conditions;
- Predicting temperature from a combination of spot temperature measurements and modelling, e.g. transformer hot spot (where oil temperature can be measured but winding temperature, particularly hot spot, must be modelled); and
- Direct temperature measurement, e.g. of OHL conductor.

110 The most usable RTTR solutions will likely be those with a common control module which can be fed with increasingly accurate data. This will allow network planners to balance the cost of getting better data over the value of the more accurate information generated.

111 Bi-directional electrical energy storage has the potential to alleviate both voltage and thermal constraints, so will best be integrated with EAVC and RTTR. Storage can be used to clip peak power flows, reducing voltage swing and thermal stress; it can also be used to support voltage, allowing permissible voltage limits to be used to accommodate voltage rise from generation[40].

112 These solutions are described in more detail in "components" earlier.

4.4.2 Definition and Number of Test Cells

113 We will first establish two test bed reception networks to prove the technology prior to their roll-out for hybrid direct customer control schemes. We seek to

[36] Network voltage controller for distributed generation (2004) C.M. Hird et al.
[37] An active 11kV voltage controller; practical considerations (2003) C.M.Hird, P.Taylor & N.Jenkins
[38] Active local distribution network management for embedded generation (2005) DTI
[39] Real-time thermal rating and active control for improved distribution network utilisation (2010) Yip, H.T et al.
[40] Evaluating the benefits of an electrical energy storage system in a future smart grid (2010). Energy Policy. Wade et al.

establish generic solutions configurable to specific network requirements. We shall therefore establish test beds at two extremes, following on from the number sequence under Learning Outcomes 1 and 2 to reduce confusion, specifically:

1. Low density rural 20kV network (Denwick, Northumberland):

- Enhanced AVC applied to series control devices:
  - Primary 66/20kV on-load tap-changers (Denwick s/s);
  - 20kV voltage regulators (Glanton & Hepburn Bell);
  - 20kV mechanically switched shunt capacitor (Hedgley Moor Sw); and
  - New 20kV/LV output voltage control, either on-load tap-changer or output side regulator/conditioner;

- Real-time thermal rating applied to series feeder components:
  - 66kV overhead line (OHL) & underground cable (UGC) (Linton-Denwick 1 & 2 66kV td fdrs);
  - 66/20kV transformers (Denwick T1 & 2);
  - 20kV OHL & UGC;
  - 20kV/LV transformer; and
  - LV OHL;

- 100kW200kWh bidirectional storage at secondary substation; and

- 50kW/100kWh bidirectional storage on LV feeder.

2. High density urban 6kV network (Rise Carr, Darlington):

- Enhanced AVC applied to series control devices:
  - Primary 33/6kV on-load tap-changers (Rise Carr s/s);
  - New 6kV/LV output voltage control, either on-load tap-changer or output side regulator/conditioner;

- Real-time thermal rating applied to series feeder components:
  - 33kV UGC (Darlington North-Rise Carr 1 & 2 33kV fdrs);
  - 33/6kV transformers (Rise Carr T1 & 2);
  - 6kV UGC;
  - 6kV/LV transformer; and
  - LV UGC;

- 2.5 MW/5 MWh bidirectional storage at primary;

- 100 kW200 kWh bidirectional storage at secondary substation; and

- 50kW/100kWh bidirectional storage on LV feeder.

114 These two test beds bracket the range of radial HV networks, serving areas with widely differing customer density. The Denwick network already creates voltage management issues, reflected by the number of control devices already installed. The main present issue on the Rise Carr network is fault level, reflected in the reactors already installed, although that is not an issue to be addressed in this project. Both also raise potential thermal issues on transformers and cables.

115 Even the load curves appear very different. The mixed customer group at Rise Carr shows the classic aggregate curve of a general day-time plateau followed by the early evening peak as domestic load picks up faster than industrial/commercial load declines. Conversely, Denwick is dominated by storage heating load, showing as peaks both overnight and in the legacy SuperTariff mid-

afternoon boost. Even so, subtracting the heating load from Denwick shows the underlying load curve to be remarkably similar to that at Rise Carr. This serves only to increase our confidence of being able to apply the learning we generate here widely across GB.

Denwick Schematic

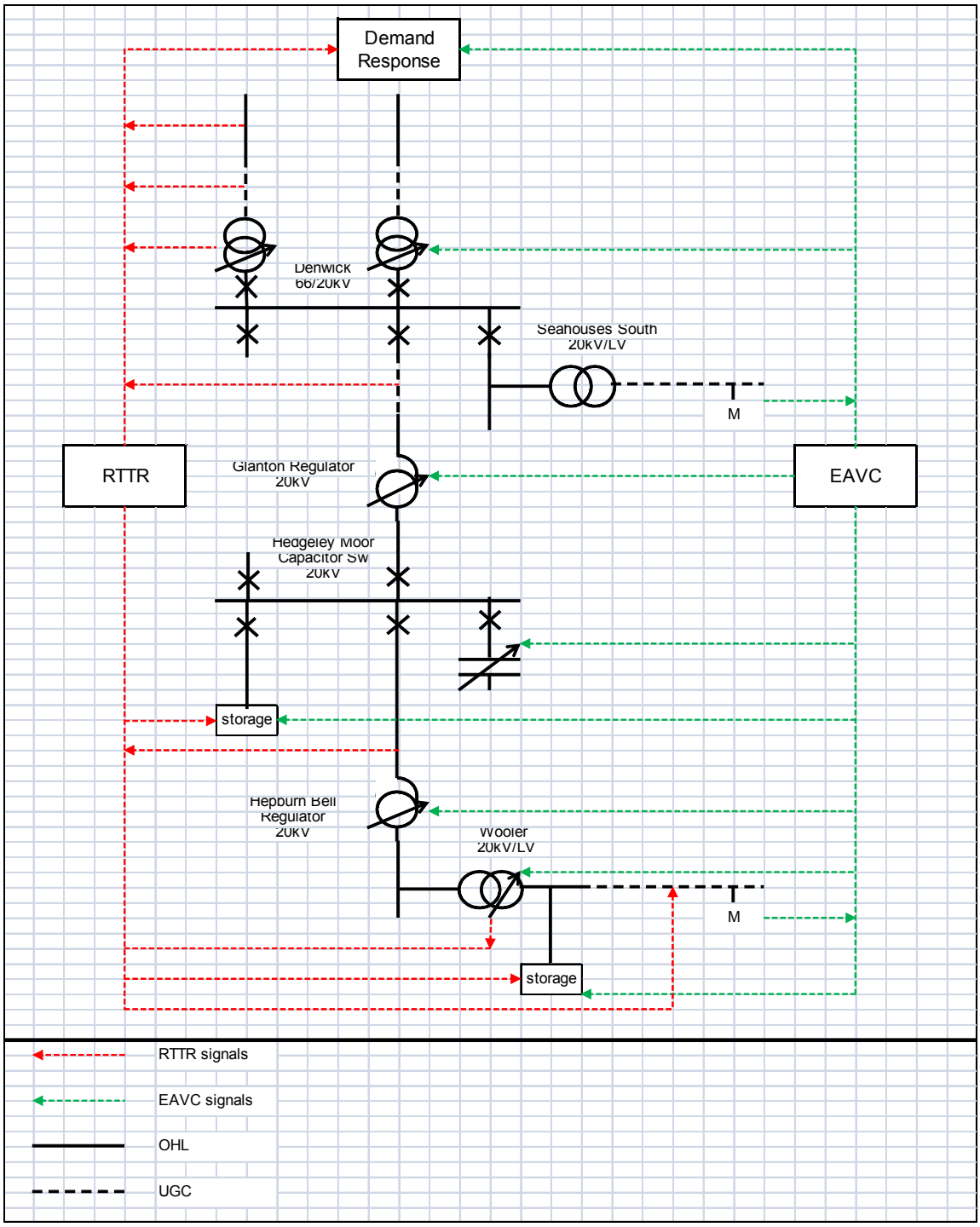

Rise Carr schematic

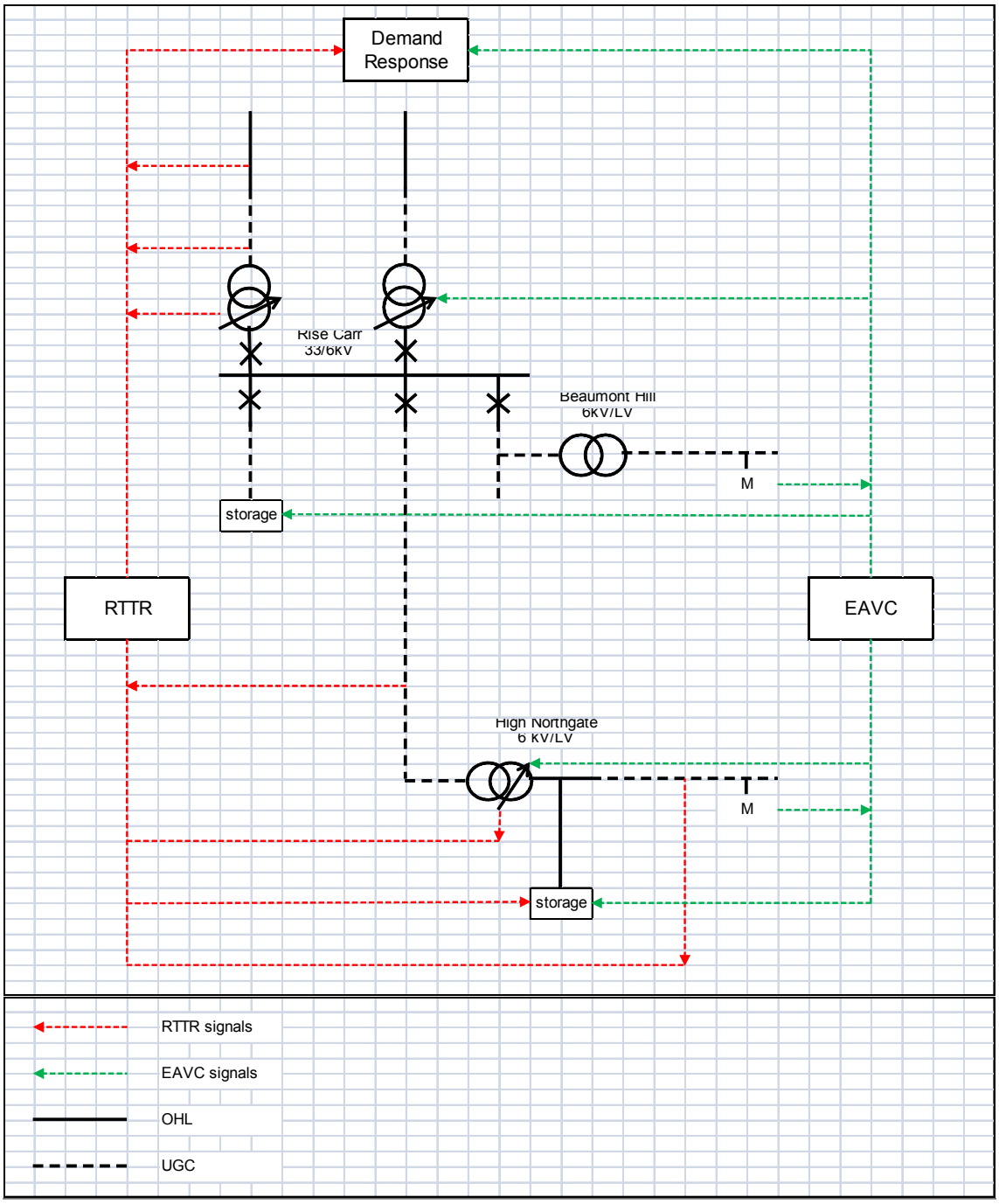

Denwick & Rise Carr 15-month load curves

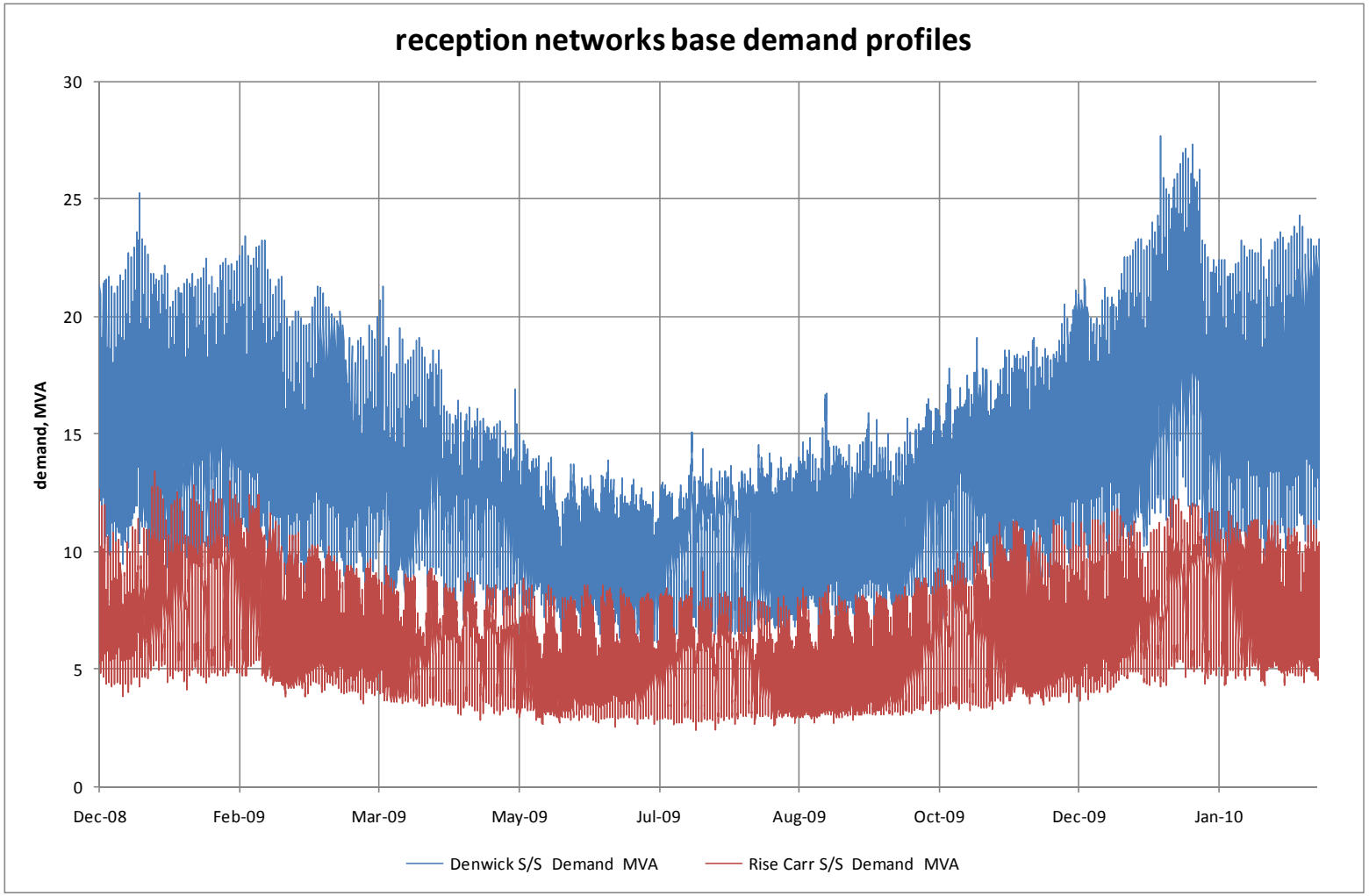

Denwick & Rise Carr typical peak day load curves

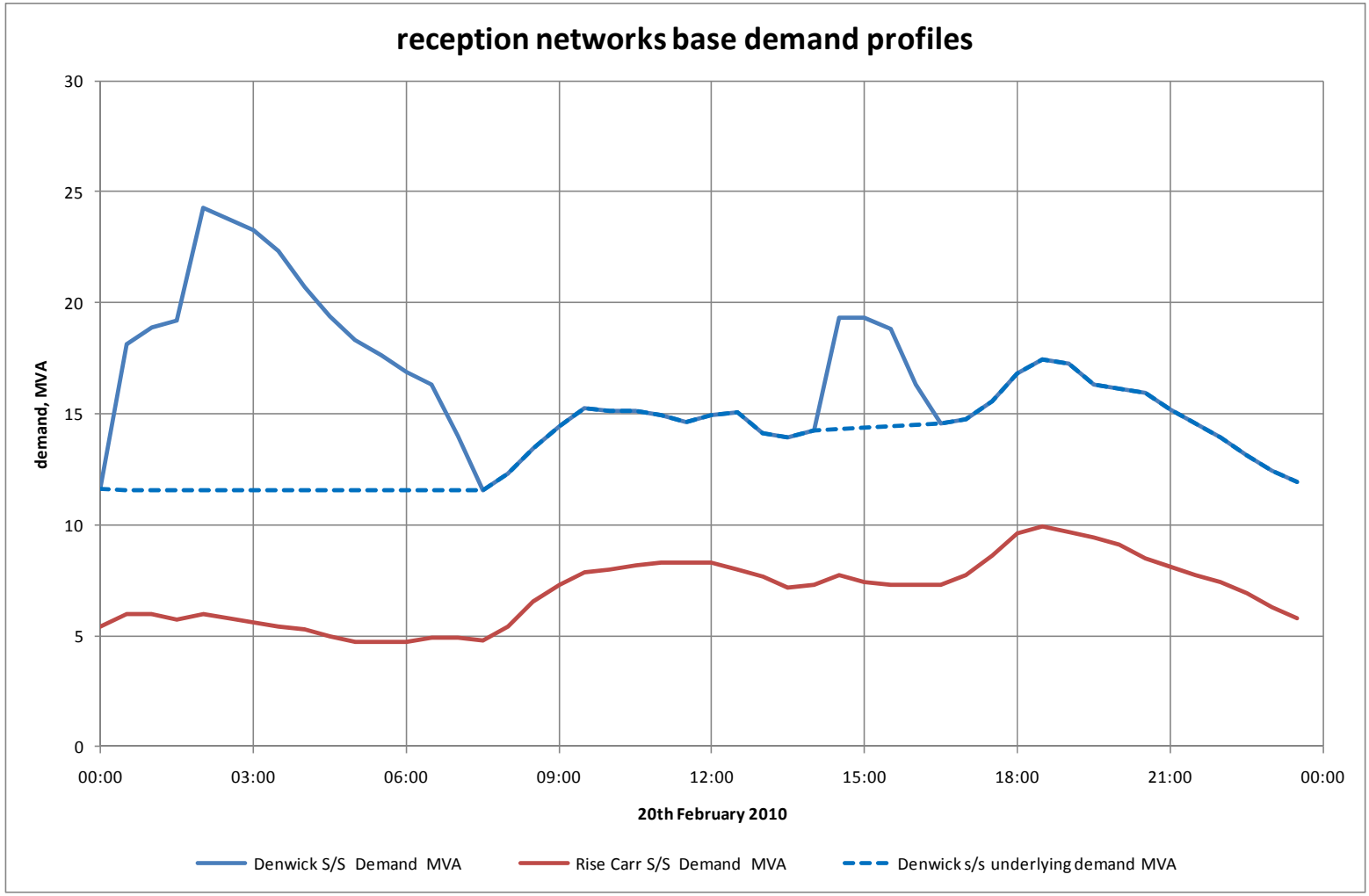

116 Combining these demonstrators with modelling, simulation and emulation allows us to generate earning (policies and guidance) applicable to any network with the same basic topology. The feeders we will use are some of the longest and shortest in GB, so feeder length and network density should not be a constraint on roll-out. The only networks where this learning is not directly applicable are those with different protection and control strategies, such as the interconnected Liverpool and London networks, or Hydro's fixed-tap 33/11kV transformers.

117 The intent is to integrate these elements to create a holistic solution to increasing network flexibility:

- The voltage that matters is the one at the point of delivery. As power flows across the distribution network become more complex, we need to move the point of control closer to the customers and use voltage references from customers rather than deep in the upstream network;

- There is a balance between measuring at secondary substation LV busbar and at the cut-out. The former is ignorant of voltage drop on the LV network. The latter may be unduly influenced by voltage drop along the service[41], but the error seems small. We assume that we will use voltage data from smart metering systems, but recognise this potential inaccuracy;

- Ensuring that series control devices work in harmony will optimise voltage profiles across the network. Our current simplifying assumption is that each device controls the voltage below itself autonomously. As power flows become more complex, and particularly as flows reverse along feeders, this assumption breaks down;

- All this releases more capacity and, when the network is not under stress, allows either losses or end consumption to be minimised[42];

- Storage or flexible customers at any one point on the network can increase headroom on any point upstream. Exploiting this is consistent with assessing real-time thermal rating for series network elements, to identify pinch points and call response most effectively; and

- We will consider the respective merits of distributed against centralised control, including hybrid solutions such as zonal control from a primary substation.

118 The key to these pilots is their integrated approach to RTTR, EAVC, demand response and storage. There is limited interaction between RTTR and EAVC, as reducing network voltage increases current (hence losses and heating) for any given load. More important is that both RTTR and EAVC need to call demand response and storage to help balance local networks.

119 The link between RTTR and demand response/storage is self-evident. If an asset is in danger of overheating, it needs to be offloaded. EAVC can also usefully access demand response and storage where the customers and network connected to a given active controller are not homogenous. For example, if a

[41] A 30-50 mΩ service with a 8-12kW shower (35-52A) gives about 2V drop, or about 0.75%. Flicker from a shower is noticeable, but 80% of the voltage drop occurs above the point of common coupling and therefore depresses voltage along the LV feeder, affecting other customers

[42] When power flows across the network are such that the full range of permissible voltages is not required, we can run the combined voltage control scheme to either:

a) Maintain network voltages as high as possible, to minimise losses on the network; or
b) Maintain network voltages as low as possible which, according to the theories behind voltage conditioners, will reduce end consumption on customers' installations

primary has one feeder with a large load and another with a large generator, no EAVC scheme at the primary can always reconcile voltages along both feeders. Changing power flows by calling customer response can change feeder voltage profiles to resolve the conflict.

120 Once proven, we will roll out selected applications of these devices as required to drive direct control of flexible customers. These test cells are described under "customer flexibility" earlier, specifically cells 11, 14, 0, 18 & 19.

121 We will establish further test cells to pilot flexible networks that respond to disruptive loads but to which customers are blind, specifically:

1. <u>PV reception networks:</u>

   - As previously discussed, the key issue for PV is voltage rise. While this will ultimately affect both LV and HV networks, we will focus on LV issues;
   - Establish new HV/LV transformer output voltage control, either on-load tap-changer or output side regulator/conditioner, to constrain voltage swings. This will use the EAVC techniques previously discussed to react to voltage as delivered to customers; and
   - Deploy storage on LV feeders to absorb export to constrain voltage rise. There is also scope to move the neutral point of the voltage control scheme, and use storage to fill the troughs to constrain voltage fall. This combination would further increase the permissible voltage regulation on the LV network.

4.5 Learning Outcome 4: what is the optimum solution to resolve network constraints driven by the transition to a low carbon economy?

4.5.1 Overview

122 The specific learning outcome sought is optimising the mix of customer and network solutions by:

- Constraint types; and
- Customer load & generation flexibility and by customer type.

123 This programme focuses upon understanding the costs of releasing headroom through customer flexibility and network flexibility. The value is in facilitating the transition to a low-carbon economy, specifically (for networks) in deferring conventional reinforcement.

124 The first stage will be to assess projected profiles and growth rates. This defines the baseline for what the transition to a low carbon economy will demand of the distribution network.

125 We need to understand how useful the various solutions will be. Not all solutions will be viable, let alone economic, in all situations. Solutions that offer only marginal improvements in headroom are valuable where growth rates are low. However, something that offers a 10% increase in headroom is of little value if local load doubles, for example after a successful heat pump sales campaign on a given street. To achieve this, we will assess the volume of headroom each solution can release against expected growth rates. This analysis will allow us to focus on those solutions most likely to deliver most value.

126 Finally, we will develop a toolkit of solutions. It is unlikely that any one solution will be the best choice for every situation. Rather, we need to understand the link between opportunity and solution, specifically to understand what the best solution is likely to be for a given network with a given set of customers. For example, customers with large volumes of PV on low-density networks will tend to create voltage rise issues with limited customer response, so EAVC may be the best solution. Conversely, customers with large volumes of heat pumps on high-density networks will tend to create thermal overload issues with scope to trim demand at peak, so a restricted hours tariff may be the best solution.

127 We also need to recognise that suppliers' and distributors' interest will not coincide in all times and places. For example, local system peak (and therefore local DUoS signals) may not coincide with national system peak (and therefore transmission and generation cost signals). The guide to the toolkit will recognise this, biasing towards network solutions where non-network solutions cease to be viable.

4.5.2 Activities

128 We will model/simulate/emulate combinations not piloted in the field, to expand the range of solutions evaluated and give network planners a bigger toolkit. We will not attempt to model customer response. That is not readily predictable. Instead, we shall use the profiles we will have developed earlier in the Project. The modelling here is of:

- Different network topologies, to demonstrate GB-wide application of the non-network and network solutions developed. In rare instances, we may identify

topologies which do not suit certain solutions, which is still a valuable learning outcome; or

- Different physical combinations on the same network. There will be pilots of customer technologies, such as heat pumps or EV charging, in isolation. We can model the combined network impact to inform future network design.

129 We will also review related learning that emerges during the course of this pilot. Where appropriate, we will reflect it in detailed trial design. We will also model/simulate/emulate combinations of the learning from this pilot with that of others, to gain a more rounded understanding of the issues. For example, if another pilot uses a different EAVC or RTTR algorithm, we can test it against the solutions deployed in this pilot.

130 We will compare the headroom these solutions can release against the expected growth rates developed under learning outcome 1, to establish which solutions are viable in which circumstances.

4.6 Learning Outcome 5: what are the most effective means to deliver optimal solutions between customer, supplier and distributor?

4.6.1 Joint Activities

131 The specific learning outcomes sought are:

- What economic structures better allow sharing of costs and benefits between customer, supplier and distributor?
- What is the interaction between supplier cost drivers and distribution cost drivers?
- How do we maximise existing commercial structures to enable the delivery of optimal solutions?
- How might commercial structures evolve better to facilitate the transition to a low carbon economy?

132 This chapter has already discussed how:

- There are aspects to customer flexibility (a fast reserve-like response) valued by both suppliers and distributors;
- Distributors can buy this response from suppliers, increasing the value to the end customer and making best use of that resource, rather than introducing harmful competition; and
- We can bring forward engineering solutions for distributors to access that response through suppliers' systems.

133 Similarly, tariffs that encourage peak avoidance and/or restrict certain types of consumption to certain times can benefit both suppliers and distributors.

134 To release this potential, we need to establish robust commercial arrangements that:

- Fairly share the value of customer flexibility between participating customers, suppliers, and distributors; and
- Are robust between different customers, suppliers, and distributors to facilitate their adoption GB-wide.

135 We will compare and contrast our findings with the more distributor-centric approaches applied elsewhere, to assess the better solution going forward.

136 These arrangements will cover both connection and ongoing use of system. We have already had some success in persuading heat pumps developers to select units with more benign characteristics that reduce reinforcement required and hence connection costs. We will expand this to explore how other arrangements of customers' equipment, particularly where customers provide some flexibility, can further reduce the costs of connecting new low- and zero-carbon technologies. Part of this study will review the role of suppliers in that process, to develop the overall proposition a supplier might offer a customer at the point of sale of a new technology.

137 A key outcome of this Project is allowing network planners to balance network and non-network solutions. This requires robust pricing of the non-network solutions that distributors purchase from suppliers. As we will not apply for derogation from CDCM governance, we will not have used DUoS tariff, nor any

distributor/supplier product, as a pricing solution in this Project. Therefore, further analysis to establish prices for demand response is required.

138 These commercial arrangements between suppliers and distributors will cover both connection and ongoing use of system. We have already had some success in persuading heat pumps developers to select units with more benign characteristics that reduce reinforcement required and hence connection costs. We will expand this to explore how other arrangements of customers' equipment, particularly where customers provide some flexibility, can further reduce the costs of connecting new low- and zero-carbon technologies. Part of this study will review the role of suppliers in that process, to develop the overall proposition a supplier might offer a customer at the point of sale of a new technology.

139 Conversely, non-firm connections will likely remain an option valued by the developers of intermittent generation projects[43,44]. Currently, non-firm connection agreements pose no material issues for suppliers. We will explore whether this is likely to remain the case, and clarify the role of non-firm connection agreements. Here, we define non-firm connection agreements as those where the developer has elected not to fund the reinforcement that would otherwise be required to allow their project to run unconstrained (save for exceptional circumstances). This is distinct from an explicitly interruptible connection, where the benefit comes in deferred general system reinforcement: our baseline for this Project is to engage this resource through suppliers and the supply contract, rather than in isolation through the connection agreement or some side deal.

140 We also need to recognise that there are times when suppliers' and distributors' interest will not coincide. In the simple model of the CDCM, where all customers' consumption peaks at the same time, then all interests coincide. Reducing consumption at system peak reduces the need for generation (scheduled and reserve), transmission and distribution, and so can release value for flexible customers. Collaboration between distributors and suppliers will increase the value that can be released for customers, which should encourage more participation.

141 However, there are places and times when local system peak does not coincide with national system peak. One example is areas with high proportions of storage heaters, where the highest demand occurs in the "off-peak" overnight period. We expect residential areas with high proportions of overnight EV charging, as they emerge, to demonstrate similar behaviour.

142 Tariff-like solutions are unlikely to benefit distributors in these situations, as cost signals both within higher levels of the distribution network and from larger cost components such as generation will likely outweigh the cost of local constraints. Direct control propositions may be of limited value, as local network constraints generally require a day-in, day-out response.

143 We shall explore this issue in more detail, in the light of better knowledge of customer and network flexibility generated during this Project. We shall seek the most efficient and economic solution overall. If this requires networks to flex to suit the needs of their users, that will be a powerful lesson to have learned.

144 To achieve this, we will:

- Critically review CDCM and DUoS tariff evolution to ensure an appropriate share of network costs and benefits between distributors and customers/suppliers;

[43] The role of demand-side management in the grid integration of wind power (2010) Moura & T. de Almeida
[44] Demand for Wind: maximising the potential of wind generation through demand side management (2005) P.Taylor et al.

- Critically review the success of DR implemented through a supplier (in this pilot) against DR through connection agreement (in other pilots), specifically considering impact on wider energy balancing issues;

- Develop agreements for distributor access to supplier-controlled fast reserve-like resource;

- Review the operation of DR through supplier when combined with non-firm connection agreements. We anticipate that non-firm connection agreements will remain a powerful tool to manage network issues, and that some connections (e.g. wind farms) will lend themselves to that solution. However, we need to reconcile this against the impact on suppliers' balancing positions;

- Consider the merits of elective DR arrangements against mandated arrangements (e.g. evolution of DCUSA[45] Demand Control provisions);

- Consider the future role of suppliers in procuring new/modified connections, and consider future requirements for individual connection agreements; and

- For all these aspects, raise change requests for DCUSA, CDCM and related codes.

4.6.2 Distributor Activities

145 There are also implementation issues for distributors. From better understanding current and likely future customer characteristics, we will develop a new design manual, specifically addressing:

- New load profiles, for voltage and thermal modelling;

- New load growth rates for forecasting general reinforcement, e.g. Load Indices; and

- New permissible loop impedance to cut-out and to point of common coupling, to manage power quality issues associated with disruptive customer technology.

146 This will be applicable directly to any GB distributor, and also provide a basis for changes to national standards such as ACE 49 and ACE 105.

147 We will secure more accurate assessment of the contribution of generation to system security, based primarily on profiling but also considering the fault ride-through capability of generator and interface protection. This would update ETR 130. It might also lead to a new spec' for interface protection, updating ETR 113 (Notes of guidance for the protection of embedded generating plant up to 5MW for operation in parallel with Public Electricity Suppliers Distribution Systems) and ER G59 (Recommendations for the connection of generating plant to the Distribution System of Licensed Distribution Network Operators), perhaps to be applied selectively where there is particular benefit from generation support.

148 Having proven novel voltage control solutions, we will develop a radical new voltage control policy. This must move from the current simple approach of a default voltage fall along the network and similar profiles across feeders, to reflect voltage rise from embedded generation and dissimilar profiles across feeders. Significant complexity will be added by the option of novel non-network

[45] Distribution Connection and Use of System Agreement, a multi-party agreement between all licensed distributors and all licensed suppliers. It is the main document governing the commercial relationship between distributors and suppliers

and network solutions to address excessive voltage swings, rather than simple conventional reinforcement being the only option. That policy will address:

- New permissible voltage rise/fall on LV and HV feeders, for intact system and first circuit outage. This is the 7% of ACE 105, not the +10%/-6% limits of the Electricity Safety, Quality and Continuity Regulations 2002 (ESQCR). We currently design for a 7% voltage drop on LV feeders. In future, we will also have to design for voltage rise;

- New primary substation voltage set points;

- New secondary substation voltage set points. We currently set the LV bars to around 250V open-circuit. To accommodate generation, these will have to be lowered, but this will increase under-voltage issues. Striking the balance requires more analysis[46];

- Variations to each of these figures according to customer mix and existing EAVC technology deployed; and

- Guidance to customer engagement and the installation of additional EAVC as an alternative to conventional reinforcement.

149 This will be applicable directly to any GB distributor, and also provide a basis for changes to national standards such as ACE 105.

150 Having proven novel solutions to thermal constraints, we will develop a new thermal rating policy for lines, cables and transformers, including:

- Guidance on the risk of thermal excursion. With more variable power flows, the current default assumptions of deterministic customer demand and asset capability fall short. Instead, we have to address the risk that an asset may exceed its thermal limit, which will be driven by:
  - Variability of underlying load and generation curves;
  - Accuracy of measurement & modelling of hot spot temperatures;
  - Consequences of excursion;
  - Safeguards and controls;

- New default ratings, maintaining a conservative approach to the risk of excursion but using better information; and

- Guidance to customer engagement and the installation of additional monitoring to increase confidence and reduce margins, allowing capacity to be released.

151 This will be applicable directly to any GB distributor, and also provide a basis for changes to national standards such as P15, P17 and P27.

152 Having proven storage solutions, we will develop a guide to their application to relieve voltage and thermal constraints. This will be applicable directly to any GB distributor, and also provide a basis for new national standards.

153 We will develop new tools for network planners for all the above. This is necessary not just to allow these new policies to be deployed, but also to facilitate the connection of new low- and zero-carbon technologies. These will be directly applicable to all GB distributors, and will likely be based on existing tools widely

[46] Recognised in SIAM 2004

used across the sector. Within the timescale of the project, we will develop only prototypes and specifications for a subsidiary project.

154 The impact of applying these innovations should not be underestimated. The number of solutions we will offer network planners will increase significantly, and the complexity will likely increase exponentially. For example, rather than simply laying out an LV network for a 7% voltage drop on a standard load profile, a network planner will now have to consider:

- Current and likely future uptake of new technologies, likely future profiles, and any uncertainty associated with them;
- Two new limits, for voltage rise and voltage fall;
- What EAVC exists, which defines which set of voltage limits should be applied; and
- If these voltage limits cannot be satisfied by “standard” network configurations (which will also have to be defined), what other tools should be addressed, including:
  - Customer engagement;
  - Further EAVC;
  - Storage; or
  - Conventional reinforcement/alternate configurations.

155 One key output is a tool for the toolkit, to guide network planners in selecting non-network, novel network and conventional network solutions. This will be built upon a better cost/benefit analysis tool, which we shall develop as part of this Project (having identified the volume and cost of new solutions for releasing network headroom) and which can be used in itself to guide further work.

156 We will also develop new operational procedures, particularly for the control room.

157 We will develop the training packages required for any distributor to take the learning generated and roll it out to become business as usual.

158 We will develop a "standard enhanced" instrumentation fit for substations, to form the basis of a new national Technical Standard. We expect to be able to release more capacity simply by better understanding of asset loading and capability. Therefore, an efficient “reinforcement” will be to enhance instrumentation at substations to provide better data for thermal ratings. The precise specification will be a product of the development of the real-time thermal and enhanced AVC, which will show what information is of greatest benefit. This will also be informed by our statistical analysis of load curves and ambient conditions, specifically in understanding the trade-off between the cost of better measurement to improve confidence against the value of investment deferred.

159 We will update network asset functional specifications, for example to provide more network status information or more granular control. Again, we will balance the extra cost of the better information against the value of investment deferred.

4.7 Analysis Methodology

4.7.1 Social (Anthropological/Demographic) Methods

160 In order to develop the understanding required for the challenge of spearheading 'customer led' low carbon transitions in energy networks, an integrated and interdisciplinary approach for developing the evidence base is required. This section outlines the contribution that social science research, developed at the DEI, will provide to the Project. This will consist of two related components:

- Understanding consumer responses: developing methodologies and undertaking research to understand the factors that shape the responses of consumers to the solutions piloted in the Project; and

- Embedding smart energy technologies: undertaking an analysis of the emergence and deployment of 'smart' network solutions in the UK and internationally to: (a) draw out the lessons for the Project as it is rolled out and; (b) as a basis for assessing the implications of the Project for the development of policy in the UK.

161 Further detail about each of these components is provided below.

4.7.1.1 Understanding consumer responses – a new approach

162 A central idea underpinning the proposed research is that consumers make choices over the how they use and generate energy, that these choices are affected by a range of factors that determine behaviour, including prices, attitudes, and demographic/socio-economic variables. This has been the dominant model for understanding consumer responses to energy (and environmental) issues within policy and industry circles in the past.

163 However, there are signs that this is a model that is running out of steam. Interventions which have been designed to encourage people to behave in a more environmental sustainable manner based on this model have largely failed[47]. Instead what emerges is a persistent 'gap' between values and action – what people say they believe in or do is not translated into action on the ground. This has led to increased efforts to get the messages right – in terms of information, price signals and so on – but consumer response to these messages remains muted. Rather than seeking to understand consumers and their responses in terms of attitudes, behaviour and choice (termed the ABC model by Shove[52]), we need instead to understand:

- How current forms of energy load/generation are shaped by practices, and how/why these might change in response to the solutions proposed in the Project; and

- The ways in which the 'systems of provision' within which energy use/generation is currently embedded might support or hinder the solutions proposed in the Project.

164 Taking this approach will provide a more holistic and realistic sense of the drivers and barriers to change in energy networks than one which looks at individuals, behaviour and choice in isolation.

[47] Commentary Environment and Planning (2000), volume 32, pages 1141 – 1148. Owens

4.7.1.2 Proposed methodology

165 In brief terms, seeking to understand the relationship between energy load/generation, everyday practices and responses to the trials involves:

- Selecting Test Cells, Controls and Comparators to represent a range of: socio-economic and demographic factors (age, ethnicity, socio-economic status) and socio-technical factors (different forms of disruptive technology, diverse building stocks etc.);

- Domestic customer groups will reflect existing BG customer groupings to deliver the objectives outlined above, recognising the fuel poor, and factors such as income, age, and property ownership;

- In-depth interviews with a representative proportion of participants in test cells, controls and comparator cases to establish the basis for their energy practices and their responses to interventions, focusing on the cultural, economic, material and social factors that shape different sorts of energy practices and how these have been challenged/changed/maintained by the interventions tested. This could be accompanied by home/business energy tours (recorded audio-visually) which provide a means of representing how different energy generating/using technologies interact with other factors in shaping energy practices and decisions; or with other visual techniques which bring into focus how people interact with energy systems[48]; and

- In-depth interviews with 'intermediaries' in the system of energy provision connected to households/businesses involved in test cells, controls and comparators (e.g. local authorities, community-based energy/environment groups, plumbers, electricians, planners, builders) to examine how their responses to such interventions would aid/limit their up take and effectiveness.

4.7.1.3 Statistical Methods & Monitoring

166 To back up this qualitative analysis, there are also quantitative tools we will deploy. Distributors need hard numbers for network design.

167 We need to understand both the average and the extremes of customer profiles, so we can use a statistical approach similar to that of ACE 49 to modelling power flows. This applies to both profiling and measuring customer response to flexibility propositions.

168 When closing the loop between network and non-network solutions, we need to demonstrate the impact of direct control. This requires sufficient clusters of participating customers to drive a measurable network response, which will generally require a change of around 20% in power flows. This approximates to a 10% change in losses and a 10% change in temperature[49]. We also need to have confidence that the response is representative of the general population, and in the technology.

169 The confidence interval for any quantity determined from a control or test group depends on the variability of the underlying variables that are measured. We cannot know what the variability of these variables will be before we have carried out the trials. (if we could know this, then there would be no reason to carry out the trials, because we would already know the results!) There is an intrinsic

[48] Social representations of electricity network technologies: Exploring processes of anchoring and objectification through the use of visual research methods (2009) Devine-Wright and Devine-Wright
[49] following Newton's law of cooling

uncertainty and therefore a risk that the planned trial sizes and measurement accuracies may not give us the quality of outputs that we expect. This risk can be mitigated by using experience from previous projects investigating the variability of load and network parameters.

170 In general therefore, the approach we will take to defining sample size by test cell will be:

- Determine the learning outcomes;
- Identify the quantities which will be used to generate the learning outcomes;
- Define the analysis to generate the quantities of interest ;
- Identify the variables to be measured and the variation of cost of measurement with accuracy of measurement;
- Estimate the incremental cost per additional customer in the sample;
- Calculate the confidence interval for a range of possible measurement errors and sample customer numbers, assuming that the variability in measured values is the same as that observed in previous, similar projects; and
- Select the preferred sample size and measurement error which will give a confidence interval which will provide a meaningful learning outcome, i.e. be acceptable for network design purposes.

171 Our baseline planning assumption, based upon previous similar work, is 100 customers per cell. We shall review this in the detailed design stage for each trial. We shall also review the costs and benefits of more expensive monitoring against engaging more customers, having regard to the desired confidence.

172 We will seek two year's data from each cell; at a minimum, we shall cover two peak seasons (two winters for general and heating load; two summers for PV).

4.7.1.4 Emulation, Simulation and Modelling

173 The modelling and simulation is designed to add value to the practical trials and to extend the learning outcomes. We will start by validating the models against the real world data gathered from the trials and then move on to the further investigation stages. The benefits of emulation, simulation and modelling are threefold:

- Initially, the modelling will inform trial design, by:
  - Assessing the network impact of combinations of technologies in open loop, leading to greater confidence in future field testing;
  - Identifying suitable locations for monitoring and control;
  - Establishing robust benchmarking of different test cells though emulation in a repeatable controlled environment;
- Secondly, modelling will provide virtual loop closure. To move these techniques from the laboratory to the standard toolkit of network engineers, we need to demonstrate on the live network that we can close the loop. Simulation may therefore be of greatest benefit in demonstrating that technologies operating in open-loop mode will deliver the benefits expected once the loop is closed;

- Thirdly, the model will create learning that can be applied GB wide, by extrapolating:
  - From small test cells to large populations;
  - Between network topologies; and
  - From deployment of individual technologies to combinations, where the interaction is purely physical. Commercial interactions will need to be tested.

174 Critically, we will close the loop between monitoring real installations and modelling. This is essential to create robust models for the network engineer's toolkit.

175 The availability to simulate the combined physical impact of observed power flows allows us to bring in data from other pilots, allowing this programme to focus on the unique benefits this consortium brings.

4.7.1.5 Control Groups and Comparators

176 There is a pure control group for this part of the pilot, specifically the mass of BG domestic/small commercial customers with:

- Smart meters;
- Flat-rate tariffs;
- No disruptive technologies; and
- No active participation in the power system.

177 We recognise that the installation and use of smart meters will change customer behaviour from where it is now. However, with a likely mandated universal smart meter roll out, this change will become the new baseline. Having this control group will also allow us to assess any further evolution in customer behaviour (for example, in response to further price shocks) through the duration of the pilot.

178 There is also a set of comparator groups for this part of the pilot, specifically:

- Any set of customers taken on a journey from dumb tariffs through smart tariffs to full participation, with increasingly sophisticated commercial propositions. Each group's observed behaviour at a previous stage provides a comparator for their behaviour at the next stage;
- A set of customers without disruptive technologies with basic profiling and smart tariffs, and a set of customers with heat pumps with basic profiling and flat rate tariffs. This will allow us to triangulate the changes in behaviour that arise from operating micro-generation with smart tariffs;
- Different demographic groups with micro-generation and smart tariffs, which will illuminate any differences in willingness to change behaviour for financial rewards; and
- A set of customers with heat pumps and smart tariffs set against a set of customers with heat pumps and basic profiling and direct control. This will allow us to triangulate the changes in behaviour that arise from operating micro-generation with direct control over and above smart tariffs.

4.7.1.6 Customer Engagement and Retention

179 We will engage existing BG customers with the new commercial propositions developed in this pilot, along with some customers of other suppliers for the network trials. This recruitment will be targeted according to the detailed design for each test cell, informed by the social and statistical analysis we will carry out to deliver the stated learning outcome.

180 We anticipate around a 50% drop-out rate for each test cell. Baseline energy customer churn is currently around 10%/yr, which we expect to rise with rising prices. Change of tenancy is around 12%/yr. It seems to us reasonable to assume an additional 10-15%/yr drop-out due to disenchantment with the pilot. Together, this gives an annual drop-out rate over 30% which, for trials of 15-27 months, yields an overall drop-out rate around 50%.

181 We will also engage small numbers of non-BG customers when testing network, as opposed to customer, response.

182 We shall ensure that all reasonable data protection concerns are addressed. We will abide strictly to the requirements of the Data Protection Act and associated legislation.

183 We contend that this programme satisfies a “regulated duty”, so it could use detailed consumption data without customers’ explicit permission. However, we shall put additional safeguards in place.

184 This project does not require real-time individual customer consumption data, which is one of the key concerns expressed over privacy. The only real-time data we will use is voltage, which reflects aggregate power flows on the local network, not the behaviour of an individual customer.

185 The project (and efficient network management generally) does require half-hourly or better consumption data to map customer profiles. This can generally be anonymised without compromising its value. The exception is data to support customer interviews, where we shall secure informed individual consent. Even here, no personal data will be used outside the Project. Only aggregated data will be released.

4.7.1.7 Conclusion: Summary of Test Cells

186 To satisfy our stated learning outcomes, we need to test:

- Customer flexibility;
- Network flexibility; and
- Closing the loop between the two.

187 We will develop solutions for/from all customer groups and for all network voltages and topologies. The pilot does involve (but is not confined to) large numbers of mass-market customers. These customers contribute to power flows at all network voltage levels, so our vision has to be broader than just LV. We will also engage larger customers, whose impact is confined to higher voltage levels, but who can offset the impact at those levels of mass-market customers. Similarly, while some network solutions (such as primary EAVC) will be deployed high up the network, their impact is felt on (and we will seek to drive them more closely from) LV networks.

188 We will build on, rather than replicate, the Energy Demand Response Pilot. Our profiling is more detailed, to allow individual components (heating, lighting, white goods etc) to be projected separately to give more credible future aggregate profiles. Our commercial propositions are more advanced, recognising distribution costs, both connection and ongoing use of system. Those propositions are applied in a more focussed manner, to new customer-side technologies such as heat pumps and EV (electric vehicle) charging. Finally, we close the loop by developing a commercial proposition for direct load control, driven either by transmission needs (fast reserve etc) or by distributor needs to alleviate network constraints.

189 We will focus on the customer choices most likely to be expressed during the pilot period, i.e. those where customer-side technologies are available and commercially viable. Therefore, although CHP (combined heat and power) and EV chargers have significant potential to change patterns of energy production and consumption, we do not expect to be able to engage many such customers until later phases of the wider programme (and subsequent Low Carbon Network Fund bids).

190 To promote customer engagement, we will run an information and education programme across the region using formal websites, blogs, etc. Building on this, we will engage active participation in the Project through commercial propositions that:

- Send a pure economic signal through a supply time of use tariff, providing customers with the tools to respond to such signals;
- Replicate current restricted hours heating arrangement by arranging to control selected circuits from the smart metering system on timebands controlled by the supplier (but where the customer opts for such a tariff), with customer over-ride to promote customer choice; and
- Modify appliance controls to respond to external signals (direct control), without customer over-ride to increase certainty of response.

191 The generic network issues are voltages outside legal limits or assets thermally overloaded. To alleviate these constraints, we will develop:

- Better understanding of asset capability and response;

- Enhanced automatic voltage control (EAVC);
- Integrated Real-time thermal Rating (RTTR) solutions, combined with the direct load control mentioned above.

192 We will engage larger numbers of customers for test cells where the key unknown is customer behaviour. Here, we need statistically significant tests to produce hard numbers on customer profiles for network design and operation. Conversely, networks are physical constructs and therefore predictable, so relatively few test cells with relatively small numbers of customers are required, as we seek only to validate and demonstrate engineering models.

The test cells arising can be summarised as:

Learning Outcome	specific learning	test cell		customer group	customer numbers (inc. drop-outs)	customer tech	commercial proposition	customer monitoring	network tech	network monitoring
1: understanding of current, emerging and possible future customer (load and generation) characteristics	· establish a new set of load profiles to update ACE49, to improve the planning of LV networks, reducing connection/reinforcement costs; understand, as best we can, how future economic, social and technological trends will change the patterns of the components of load and generation, so we can better forecast where we will (and will not) need to reinforce the network.	1	Basic profiling of regular smart meter customers	regular domestic	9,000	none	flat tariffs	smart meters	none	none
				regular small commercial	2,250					
		2	Enhanced profiling of regular smart meter customers	regular domestic	600	none	flat tariffs	enhanced smart meter	none	none
				regular small commercial	150	none	flat tariffs	enhanced smart meter	none	none
		3	Enhanced profiling HP on flat-rate tariff:	domestic, HP	600	HP	flat tariffs	enhanced smart meter	none	for selected clusters: voltage profile and power quality
		4	enhanced profiling µCHP on flat-rate tariff	domestic, µCHP	20	µCHP	flat tariffs	enhanced smart meter	none	none
		5	Enhanced profiling PV	domestic, PV	150	PV	flat tariffs	enhanced smart meter	none	for selected clusters: voltage profile and power quality
		6	enhanced profiling EV on flat-rate tariff	domestic, EV	150	EV	flat tariffs	enhanced smart meter	none	none
		7	understand impact of April 2010 tariff reform	I&C	14,000	none	CDCM 3-rate HH DUoS tariff	mandatory HH meters	none	none
	· establish a new set of generation profiles to update ETR130, better to recognise the contribution of generation to system security, reducing general reinforcement costs;	8	profiling for generation under smart tariffs	DG	230	none	CDCM 3-rate HH DUoS tariff	mandatory HH meters	none	none
2: to what extent are customers flexible in their load and generation, and what is the cost of this flexibility?	establish to what degree customers will accept propositions for flexibility, from time of use tariffs to direct control; and to what degree customers who have accepted a proposition for flexibility will then respond	9	Pure ToU tariff, general load	regular domestic	600	none	3-rate ToU tariff	enhanced smart meter	none	none
				regular small commercial	150	none	3-rate ToU tariff	enhanced smart meter	none	none
		10	Restricted hours tariff, general load	regular domestic	600	none	restricted hours tariff, customer over-ride	enhanced smart meter	none	none
				regular small commercial	150	none	restricted hours tariff, customer over-ride	enhanced smart meter	none	none
		11	Direct control, general load	regular domestic	600	none	direct load control, without over-ride, for tariff discount	enhanced smart meter	HV feeder RTTR to synthesise control signal	none
				regular small commercial	150	none	direct load control, without over-ride, for tariff discount	enhanced smart meter		none
		12	Pure ToU tariff, heat pumps	domestic, HP	600	HP	3-rate ToU tariff	enhanced smart meter	none	none
		13	Restricted hours tariff, heat pumps	domestic, HP	150	HP	restricted hours tariff, customer over-ride	enhanced smart meter	none	none
		14	Direct control, heat pumps	domestic, HP	150	HP	direct load control, without over-ride, for tariff discount	enhanced smart meter	for 3 discrete selected clusters: 1x secondary EAVC and 1x secondary RTTR to generate control signal from artificial constraint. 1x secondary storage to clip peaks and fill troughs	voltage and power flow, associated with EAVC, RTTR and storage control schemes
		15	Pure ToU tariff, domestic EV	domestic, EV	50	EV	3-rate ToU tariff	enhanced smart meter	none	none
		16	Restricted hours tariff, domestic EV	domestic, EV	50	EV	restricted hours tariff, customer over-ride	enhanced smart meter	none	none
		17	Direct control domestic EV	domestic, EV	50	EV	direct load control, without over-ride, for tariff discount	enhanced smart meter	HV feeder RTTR to synthesise control signal	none
		18	Ancillary services (fast reserve) provision	I&C	5	responsive load	direct load control, without over-ride, for tariff discount	mandatory HH meters	1 x primary EAVC; 2 x primary transformer RTTR, to generate control signal (assumes some clustering)	voltage and power flow, associated with EAVC and RTTR control schemes
				DG	5	responsive generation	direct load control, without over-ride, for tariff discount	mandatory HH meters	2 x primary EAVC; 3 x primary transformer RTTR, to generate control signal	voltage and power flow, associated with EAVC and RTTR control schemes
		19	Ancillary services (voltage support) provision	DG	5	responsive generation	collar on output flexibility, for tariff discount	mandatory HH meters	none: self-despatched	voltage and power flow, to monitor pilot operation
		20	Within-premises balancing	domestic, PV	600	PV, responsive load (e.g. immersion heater)	tariff discount to reflect network and FIT benefits of on-site consumption	enhanced smart meter	none	none

Learning Outcome	specific learning	test cell		customer group	customer numbers (inc. drop-outs)	customer tech	commercial proposition	customer monitoring	network tech	network monitoring
3: To what extent is the network flexible and what is the cost of this flexibility?	what are the most effective interventions to deliver this flexibility? what is the unit cost of delivering flexibility by each intervention? how does the volume of flexibility and its cost differ by network topology?	21	Low density rural 20kV network (Denwick, Northumberland):	no direct participation	-	-	-	-	integrated EAVC at primary, in-line 20kV auto-transformer voltage regulators, shunt 20kV switched capacitor bank, and 20kV/LV secondary substations	voltage references from smart meters to inform EAVC
									integrated RTTR on 66kV OHL & UGC, 66/20kV transformers, 20kV OHL & UGC, 20kV/LV transformers and LV UGC	power flow, ambient conditions and asset temperature to inform RTTR
									bidirectional electrical energy storage, integrated with EAVC and RTTR to relieve voltage and thermal constraints: 2.5MW at primary substation; 100kW at secondary substation; 50kW on LV feeder	voltage and power flow, associated with storage control schemes
		22	High density urban 6kV network (Rise Carr, Darlington)	no direct participation	-	-	-	-	integrated EAVC at primary and 6kV/LV secondary substations	voltage references from smart meters to inform EAVC
									integrated RTTR on 33kV OHL & UGC, 33/6kV transformers, 6kV OHL & UGC, 6kV/LV transformers and LV UGC	power flow, ambient conditions and asset temperature to inform RTTR
									bidirectional electrical energy storage, integrated with EAVC and RTTR to relieve voltage and thermal constraints: 2.5MW at primary substation; 100kW at secondary substation; 50kW on LV feeder	voltage and power flow, associated with storage control schemes
		23	PV reception networks:	domestic, PV	within groups previously described	PV	flat-rate tariff	enhanced smart meter	for 2 discrete selected clusters: 1x secondary EAVC to limit voltage swing and 1x secondary storage to clip peaks and fill troughs	voltage and power flow, associated with EAVC and storage control schemes
notes	Enhanced smart meter: aggregate flow plus key components, 10-min interval, real and reactive flows plus voltage and total harmonic distortion									
	EAVC: enhanced automatic voltage control, to manage network voltage by measuring the point of delivery rather than deep in the network									
	OHL: overhead line									
	UGC: underground cable									

The customer-numbers involved can be summarised as:

Test requirements		Reception Network	general domestic customers, dispersed	small commercial customers, dispersed	domestic customers, HP, dispersed	domestic customers in clusters, HP	clusters of domestic customers, HP, clusters (30-50 custs)	domestic customers, CHP, dispersed	domestic customers, PV, dispersed	domestic customers in clusters, PV	clusters of domestic customers, PV, clusters (30-50 custs)	domestic customers, EV, dispersed	merchant generators	I&C Customers inc CWOGs
Scope of LCNF bid	existing data sets												×	×
	national roll-out of smart meters		×	×										
	Specific to this LCNF project	×	×	×	×	×	×	×	×	×	×	×	×	×
Learning Outcome 1: understanding of current, emerging and possible future customer (load and generation) characteristics														
	basic profiling (BG smart meter data) of regular domestic/small commercial customers		9000	2250										
	detailed network response profiling: focus on physical response rather than customer social/statistical analysis					180	9			60	3			
	basic profiling (CE HH meter data) of "merchant" generation to demonstrate contribution to system security												230	14000
	detailed customer profiling		600	150	600			20	150			150		
LO2: to what extent are customers flexible in their load and generation, and what is the cost of this flexibility?														
	pure economic ToU supply tariff		600	150	600							50		
	restricted hours supply tariff		600	150	150							50		
	direct control		600	150	150		2					50		
	I&C offtake reduction													5
	pure economic ToU generation tariff							0						
	merchant generation network support												10	
	within-premises balancing								600					
LO3: To what extent is the network flexible and what is the cost of this flexibility?														
	primary EAVC	2											2	1
	regulator EAVC	2												
	capacitor EAVC	1												
	secondary EAVC	2					1				1			
	EHV fdr RTTR	2											3	2
	HV fdr RTTR	2			1							1		
	secondary RTTR	2					1				0			
	HV storage	1											1	0
	secondary s/s storage	1					1				1			
LO4: what is the optimum solution to resolve network constraints driven by the transition to a low carbon economy?														
LO5: what are the most effective means to deliver optimal solutions between customer, supplier and DNO?														
integration														
	total (inc top-up for drop-outs)	14	11,400	2,850	1,501	180		20	750	60		301	246	14,008

193 We will develop a new model for the commercial relationship between customer, supplier and distributor, including:

- Building in customer participation and supplier/distributor cooperation from the point of connection, as well as in ongoing supply;

- New distribution and supply tariffs that share the benefits of customer participation; and

- Changes to DCUSA (Distribution Connection and use of System Agreement) and related codes that capture a new relationship, specifically where distributors purchase demand response via suppliers.

194 We expect to inform the evolution of the detailed specification for smart meters and smart grids, particularly around common interfaces for distributors to access suppliers' demand response resource.

195 The key deliverables to change distributor business as usual are:

- From better understanding current and likely future customer characteristics, an updated design manual, which will also inform changes to national standards, specifically addressing:

    - New load profiles, for voltage and thermal modelling;
    - New load growth rates for forecasting general reinforcement, e.g. Load Indices;
    - New permissible loop impedance to cut-out and to point of common coupling, to manage power quality issues associated with disruptive customer technology;

- Having proven novel voltage control solutions, a radical new voltage control policy, moving from the current simple approach of a default voltage fall along the network and similar profiles across feeders, better to reflect voltage rise from embedded generation and dissimilar profiles across feeders. Significant complexity will be added by the option of novel non-network and network solutions to address excessive voltage swings, rather than simple conventional reinforcement being the only option. That policy will address:

    - New permissible voltage rise/fall on LV and HV feeders, for intact system and first circuit outage. This is the 7% regulation on LV feeders of industry standards, not the +10%/-6% limits of regulations;
    - New primary substation voltage set points;
    - New secondary substation voltage set points;
    - Variations to each of these figures according to customer mix and existing EAVC technology deployed; and
    - Guidance to customer engagement and the installation of additional EAVC as an alternative to conventional reinforcement;

- Having proven novel solutions to thermal constraints, a new thermal rating policy for lines, cables and transformers, including:

    - Guidance on the risk of thermal excursion, recognising:
        - Variability of load and generation curves;
        - Accuracy of measurement & modelling of hot spot temperatures;
        - Consequences of excursion; and
        - Safeguards and controls;

    - New default ratings;

    - Guidance to customer engagement and the installation of additional monitoring to increase confidence and reduce margins, allowing capacity to be released;

- Having proven storage solutions, a guide to their application to relieve voltage and thermal constraints;

- New operational procedures for all these tools, including for system control;

- New design tools for all the above. This is necessary not just to allow these new policies to be deployed, but also to facilitate the connection of new low- and zero-carbon technologies. This will include a selection tool that reflects the costs and benefits of the various non-network and network solutions that this Project will make available; and

- New asset specifications, to provide better information and more control facilities.

196 For each of these areas, we will develop outputs that are directly applicable to all GB distributors, and can form the basis for new national standards.

Appendix: Test Cell Sizes.

197 This section provides an example of statistical testing that has been done previously. Future statistical work for detailed trail design will build on this, going further and more detailed in its scrutiny. We shall update this analysis as better data becomes available through the course of the Project.

Assumptions

198 The accuracy of any average parameter determined from a control or test group depends on the variability of the underlying parameter. For this study, kWh load data collected on a 10-minute basis from a property consuming around 15kWh/day (5000kWh per year) has been used. 3 months of load data were available.

199 It is assumed that the Control and Test groups are distributed in location, and that there is no correlation in load drawn between those locations – i.e. the main factor in variability is customers' random day-to-day habits rather than say, environmental factors.

200 It is assumed that the variation of energy demand for each customer in each group is equal to that measured at the test property.

201 Where confidence intervals are stated, these are to a confidence level of 95%, as commonly used.

The Meaning of Confidence Intervals

202 At a confidence interval of ±1.0% and a confidence level of 95%, if the difference in mean energy consumption between the Control and Test groups was 5.0%, then we are 95% certain that the true difference in energy consumption is between 4.0% and 6.0%.

Test Cell Size, (where the parameter of interest is a change in energy consumption per day)

203 E.g. a tariff is introduced to encourage customers to reduce their energy consumption, and the value of interest is the daily reduction in CO2 emissions.

204 To work out the numbers of customers required in each group requires two main parameters: the deviation of daily energy consumption and the number of energy consumption measurements in each group. With n customers in each group, the number of actual measurements of energy consumption is n*days, where days is the number of days for which monitoring is undertaken.

205 The following equation can then be used to calculate the confidence interval for the difference in energy consumption between the Control and Test groups:

$$\mu = \pm\left(ts\sqrt{\frac{2}{n * days}} \right) \qquad \textbf{(1)}$$

206 where *s* is the combined standard deviation of daily energy consumption in the two groups and *t* is a value which corresponds to the chosen confidence level for evaluation (t tends towards 1.96 for >100 customers and a confidence level of 95%) .

207 The deviation of daily kWh at the sample property was 4.76kWh/day on a mean consumption of 15kWh/day (i.e. 32% relative). We assume in this analysis that this deviation is representative of all customers in each group. Hence the combined standard deviation, *s* is equal to 4.76kWh/day.

208 Table 1 shows the effect of different group sizes and monitoring periods on the confidence interval (or accuracy) of determined changes in energy consumption.

Table 1: Confidence Intervals Daily Energy Consumption Changes

[redacted]

Highlighted cells indicate determination to better than 1.0%

209 If it were desired to restrict the calendar assessment time involved to say 6 months, then test cell sizes could be as low as 10 customers in each of the Control and Test groups, to reach a ±1.0% calculation accuracy on the difference in energy consumption.

210 Restricting to 3 months, test cell sizes would need to be 20 customers in each group to reach ±1.0% accuracy. Hence, if a measure resulted in a 5% energy saving in the Test Group, we would state that the true energy saving in that time period was between 4% and 6%.

Test Cell Size, (where the parameter of interest is a change in the load profile)

211 E.g. it is desired to determine whether there is a reduction in peak load, or a load shift due to a tariff being introduced.

212 To work out the numbers of customers required in each group requires two main parameters: the inter-day deviation of energy consumption at different times of day and the number of energy consumption measurements in each group. With n customers in each group, the number of actual measurements of energy consumption at each 10-minute interval is n*days, where days is the number of days for which monitoring is undertaken.

213 The following equation can then be used to calculate the confidence interval for the difference in energy consumption between the Control and Test groups:

$$\mu = \pm\left(ts\sqrt{\frac{2}{n * days}} \right) \qquad \textbf{(2)}$$

214 where *s* is the combined standard deviation of inter-day energy consumption in the two groups and *t* is a value which corresponds to the chosen confidence level for evaluation (t tends towards 1.96 for >100 customers and a confidence level of 95%) .

215 20 days of representative domestic load data were evaluated to determine s, the inter-day deviation between energy consumed in each 10-minute period. The average deviation was 0.032kWh/10min, with mean consumption being 0.11kWh/10min (29% relative). Deviation increased during the hours of peak load, to 0.040kWh/10min. This value is used for s, as peak times will be of most interest.

216 Table 2 shows the effect of the monitoring time period and test cell size on the confidence level (or accuracy) of determined changes in load profiles.

Table 2: Accuracies of Determining Load Profile Changes

Acc ±%	Customers per group	1	5	10	20	50	100	200	500	1000
Months										
1		9.0%	4.0%	2.9%	2.0%	1.3%	0.9%	0.6%	0.4%	0.3%
2		6.4%	2.9%	2.0%	1.4%	0.9%	0.6%	0.5%	0.3%	0.2%
3		5.2%	2.3%	1.6%	1.2%	0.7%	0.5%	0.4%	0.2%	0.2%
4		4.5%	2.0%	1.4%	1.0%	0.6%	0.5%	0.3%	0.2%	0.1%
5		4.0%	1.8%	1.3%	0.9%	0.6%	0.4%	0.3%	0.2%	0.1%
6		3.7%	1.6%	1.2%	0.8%	0.5%	0.4%	0.3%	0.2%	0.1%
7		3.4%	1.5%	1.1%	0.8%	0.5%	0.3%	0.2%	0.2%	0.1%
8		3.2%	1.4%	1.0%	0.7%	0.5%	0.3%	0.2%	0.1%	0.1%
9		3.0%	1.3%	1.0%	0.7%	0.4%	0.3%	0.2%	0.1%	0.1%
10		2.9%	1.3%	0.9%	0.6%	0.4%	0.3%	0.2%	0.1%	0.1%
11		2.7%	1.2%	0.9%	0.6%	0.4%	0.3%	0.2%	0.1%	0.1%
12		2.6%	1.2%	0.8%	0.6%	0.4%	0.3%	0.2%	0.1%	0.1%

Highlighted cells indicate determination to better than 1.0%

217 Hence, at 6 months calendar time, the Control and Test groups need to be comprised of around 15 customers each to reach ±1.0% accuracy on the difference in consumption at any point in time on the load profile.

218 At 3 months, around 30 customers are required in each group.

219 This analysis assumes that a single value for the difference in energy consumption at a time of day is required. Obviously, if time-trends in the difference in energy consumption between Control and Test Groups are required then test cell sizes must be increased. A reasonable size to observe these on a monthly basis at ±1.0% accuracy would be 100 customers in each group.

Summary

220 The most onerous case examined is the analysis of load profiles for time-of-day changes during energy consumption peaks. Where monthly time-trends are desired to be detected at high accuracy, which will generally be the case to be useful to network planners, required cell sizes are indicated to be around 100 customers per group.

221 Where time-trends are not important, test cell sizes are indicated to be around 30, providing for 3-month analysis windows with high accuracy.