Customer-Led Network Revolution

Enhanced Network Monitoring Report

DOCUMENT NUMBER
CLNR-L232

AUTHORS
Mike Lees, EA Technology Limited

ISSUE DATE
31/12/2014

Contents

1. Executive summary

INTRODUCTION

Monitoring provides a network operator with visibility that the network is performing within its capability and is able to operate within legal and regulatory limits (e.g. Statutory Supply Voltage limits). Network visibility that is required for network control is different (more onerous) in terms of accuracy, periodicity and data latency from the network visibility that is required for network design, which is different again from that required for network planning.

In the Customer-Led Network Revolution (CLNR) project monitoring was deployed to understand the impact of Low Carbon Technologies (LCT) on network feeders at LV and HV. Monitoring was also deployed to understand the behaviour and impact of the smart solutions - Enhanced Automatic Voltage Control (EAVC), Real Time Thermal Ratings (RTTR), Electrical Energy Storage (EES) and Demand-side Response (DSR) – which were investigated in the CLNR project. The monitoring data was used for analysis of the network trials and the learning from the project has implications for control, design and planning of networks.

Using the learning from the project, a recommended cost-effective Business As Usual (BAU) monitoring strategy has been produced, which would provide data for the purposes of planning, design and control in a cost effective manner. Data of lower resolution and higher latency, suitable for planning purposes, when suitably augmented by higher resolution, lower latency data, can be re-used for network design and control, reducing the overall cost of providing a full data set for network purposes. Draft requirements for monitoring are recommended in this document. Technical recommendations for the purchase of trialled CLNR equipment for these purposes have been produced[1].

METHOD

The type of monitoring carried out in the CLNR project was dependent on the monitoring location. There were eight generic monitoring locations, denoted M1 to M8 as shown in the diagram and table below:

[1] Technical recommendations are available on the CLNR website project library: http://www.networkrevolution.co.uk\resources\project%20library

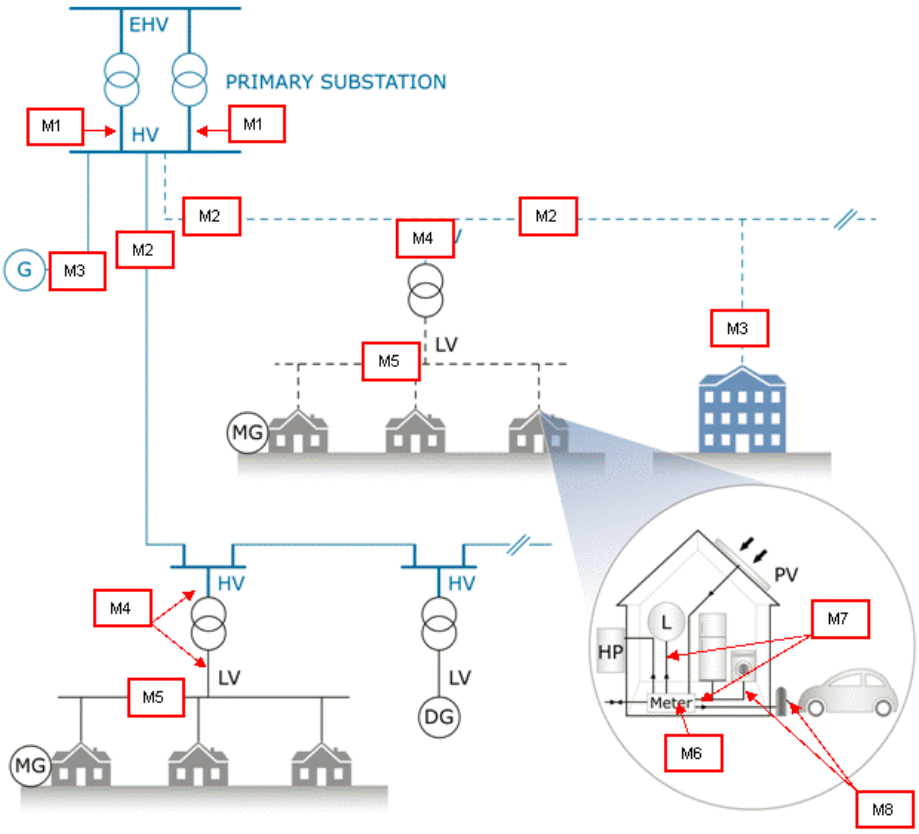

Monitoring Type	Description of location and functionality
M1	Primary transformer output 3 phase monitoring of voltage and current, real reactive and apparent power
M2	HV feeder monitoring either at source or some additional secondary monitoring point along the feeder 3 phase monitoring of voltage current, real, reactive and apparent power
M3	HV Industrial and Commercial customers typically connected to metering VTs with CT measurement of metering CT secondary current, 3 phase monitoring of voltage, current, real reactive and apparent power.
M4	Secondary Distribution transformer monitoring connected to HV or LV as most convenient, typically expected to be LV connected, 3 phase monitoring of voltage current real reactive and apparent power current and voltage harmonic distortion flicker and unbalance.
M5	LV Feeder monitoring at substation or additionally at some other points on the feeder 3 phase monitoring of voltage current real reactive and apparent power current and voltage harmonic distortion, flicker and unbalance
M6	LV Customer's cut-out provides information about aggregate or net site load, typically provided by use of a smart meter but can be a separate monitor for non BG customers

M7	LV ring main or other dedicated circuit at or near consumer unit to provide disaggregated load monitoring of a larger load or group of loads
M8	LV appliance or equipment provides disaggregation of individual appliances or equipment

Appendix 3 of this monitoring report shows the initially specified requirements for monitoring for EAVC, EES, PV impact, EV / HP impact on the network.

Appendix 4 of this monitoring report shows the initially specified requirements for measurements that are made at HV for control and monitoring purposes.

FINDINGS FROM CLNR

Disparate systems have been successfully integrated to provide an overall monitoring solution including pre-existing SCADA; a separate control and data communication system using the GUS controller and associated Remote Distributed Controllers; plus data acquisition using iHost and associated RTUs.

The learning from the project has enabled the original monitoring specifications to be refined. The learning from the monitoring activities in CLNR has been distilled into a recommended monitoring strategy for BAU. More details and the rationale for this strategy are given in section 7 of the report and are summarised below.

Data, Information and Knowledge

The CLNR project has looked primarily at voltage and power flow, with a limited analysis of power quality

Monitoring provides **Data** on network status, at the places and times on the network that measurements have been made. However, this data has no intrinsic value without further processing. What is actually required is **Knowledge** of network status, now and in the future (what is meant by future will be discussed further below).

For power flow, DNOs need to **know** what's about to be overloaded. For voltage, DNOs need to **know** where what is delivered to customers is about to go outside limits. The approach to both is so similar that:

a) for design purposes, generally the same load-flow run of the same network model with the same data is used to assess both power flow and voltage sufficiency.
b) for control purposes in the CLNR project, using a real-time state estimation & optimisation controller, the same run of the same model with the same data was used to assess both power flow and voltage simultaneously.

Power flow (demand) and Voltage can be measured at various places at various times. This is **Data**.

Modelling activities can provide **Information**:

- Measured values of power flow and voltage can be used in a load flow model of the network to produce time-resolved profiles of power flow (demand profiles) and time-resolved voltage profiles at many points on the network, not just those that have been monitored
- These calculated demand profiles and voltage profiles can be used to produce generally applicable profiles for given conditions, for example for winter and summer periods, weekday, weekend day

etc. This is **Information** (there has been data processing, taken averages, chosen representative periods, etc.)

- The calculated demand profile at various points on the network defines the power that the circuits are, and will be, required to carry at various defined times, hence the required capacity at those points)

We need additional **information** in order to create the required Knowledge e.g.:

- The Statutory voltage limits for supply of power to customers.
- Capacity of the circuit to carry power.
- Longer-term change in demand (for planning purposes…could be derived from customer data, or network power flow data processed in a different way).
- Possible network topology changes, which might be required to accommodate circuit outages due to maintenance or faults (for control purposes...probably defined from scenario planning).
- Other information, depending on the knowledge that is required.

In the UK, engineering recommendations P15, P17 and P27 are generally used to define the capacity of electricity distribution network assets to carry power. In this report we use the term "static ratings" for these quantities. Other aspects of the CLNR project have assessed the suitability of static ratings for Overhead Lines, Cables and Transformers and have explored alternative methods to determine actual circuit capacity.

By comparing the demand profiles with the capacity of circuits to carry power, we can **know** what's about to be overloaded. Also by comparing the voltage profile with the statutory voltage limits we can **know** what's about to produce a voltage excursion.

These are fundamental principles that apply to control, design and planning of a distribution network. These fundamental principles can also be expanded to include other things that DNOs need to know which are outside of the scope of CLNR, e.g. Fault Level.

There are similarities in the approach which can be used by control, design and planning functions to create knowledge of potential overloads and voltage excursions, albeit that the functions are necessarily interested in the same knowledge over very different timescales.

Depending upon the value of the risk of overload or voltage excursion (i.e. the probability of overload or voltage excursion multiplied by its consequence in terms of safety, regulatory penalties, cost of remediation etc.), the following approaches may be adopted:

a) In simple, well understood situations, use deterministic limits and provide policy guidance (this is the default position in many cases today).
b) Where the situation is too complex for management using limits, or management using limits would result in an unacceptable cost, then mathematically reduce the problem, describe using simple rules and provide guidance.
c) Where the situation is (or is believed to be) too complex for management using rules, or management using rules would result in an unacceptable cost, then use load-flow modelling.

Note that irrespective of which of these approaches is adopted, the underlying philosophy is the same. i.e. generate information from data. Combine information to produce knowledge. Act on that knowledge.

Clearly, cost is an important factor when deciding what and how to measure or model. It is uneconomic to implement low latency monitoring of everything everywhere.

Note that in this report, a distinction is drawn between **Measuring** (i.e. using a sensor to produce a value that can be read or stored locally) and **Monitoring** (i.e. communicating a measured value at regular intervals to a central location).

Application of this approach leads to the following recommended monitoring strategy for Business as Usual.

Recommended Monitoring Strategy

- Endeavour to identify the lowest cost route to acquiring knowledge, which is needed to ensure that a distribution network can fulfil its purpose whilst operating within its physical, regulatory and legal constraints.
- Relatively low time resolution data with high latency for planning purposes can be augmented by higher time resolution data on specific circuits for design purposes. Higher time resolution, low latency data is required for control purposes. For example, the characteristic thermal time constant of overhead line conductors typically used for distribution networks range from approximately 4 minutes (Almond) to 17 minutes (Elm). A control system requires measurements at intervals which are of the order of the characteristic time constant, or less, if it is being used to avoid thermal overload of the conductor.
- Where it is more cost effective, modelling can be used to produce information from monitoring data in preference to installing more monitoring equipment. For example, half hourly demand profiles are sufficient for planning purposes. These demand profiles can be used in a suitable load flow model of the network to calculate voltage profiles. The voltage profiles can be used to identify circuits with potential voltage issues and produce alerts. These circuits can then be studied in more detail, which might require additional monitoring of a broader range of quantities with higher time resolution. 'Modelled' alerts could be compared with real alerts from monitors (e.g. smart meters) as a means of verifying / validating the model or to identify further model refinement.

Hence:

i. Where you can afford to measure something directly and both a) need to and b) can afford to monitor the measurement value with low latency, monitor continuously.
ii. Supplement measurements with outputs from a representative model which takes measurement values as inputs, providing that this is more cost effective than making more measurements and is sufficiently accurate.
iii. Where you can afford to measure something directly and either a) don't need to or b) can't afford to monitor the measured value with low latency (immediately?), set a trigger level(s) and transfer information only when the trigger(s) occur(s);
iv. Where you can't afford to measure everything directly, or model everything all the time, simplify the problem to define some suitable proxy and set a trigger level on that.

Summary of monitoring requirements for HV & LV Planning Purposes

Measurement of:

- Half-hourly or better averages of bi-directional / 4 quadrant real and reactive power for each phase of each transformer at primary substations (note that 10 minute or lower time averages are required for Control purposes).
- Half-hourly or better averages of bi-directional / 4 quadrant real and reactive power for each phase of all feeders at primary substations (note that 10 minute or lower time averages are required for Control purposes).
- Half hourly average voltage of busbar at primary substations (note that 10 minute or lower time averages are required for Control purposes).
- Half hourly average bi-directional / 4 quadrant real power of each phase of each feeder at secondary substations.
- Half hourly average voltage of LV busbar at secondary substations.

The accuracy of voltage and current measurements should preferably be 0.5%. It is also useful, but not essential, to have higher time resolution voltage information at the LV busbar and at LV feeder end. 10 minute average data would be ideal, however this is unlikely to be cost effective. The number of times at a customer's premises that voltage has crossed a defined threshold (set within the statutory voltage limits) within a defined period could provide sufficient early warning of potential voltage excursions within timescales suitable for planning activities to respond to the potential excursion. The time at which such excursions occurred would also be useful.

LV Customer smart meters will be able to provide half-hourly customer demand data. This could be aggregated to produce demand data for the majority of individual LV circuits. LV Customer smart meters will also be able to provide time data when voltage crosses pre-defined thresholds, which would be useful to determine if the cause of the threshold crossing is known or whether higher time resolution monitoring of the feeder is required. LV Customer smart meters will also be able to provide time of voltage excursion.

Summary of monitoring requirements for HV & LV Design Purposes

Measurement of:

- Half-hourly or better averages of bi-directional / 4 quadrant real and reactive power for each phase of each transformer at primary substations (note that 10 minute or lower time averages are required for Control purposes).
- Half-hourly or better averages of bi-directional / 4 quadrant real and reactive power for each phase of all feeders at primary substations (note that 10 minute or lower time averages are required for Control purposes).
- Half hourly average voltage of busbar at primary substations (note that 10 minute or lower time averages are required for Control purposes).
- Half hourly average bi-directional / 4 quadrant real power of each phase of all feeders at secondary substations.

- Half hourly average voltage of LV busbar at secondary substations.
- 10 minute average bi-directional / 4 quadrant real and reactive power of each phase of feeders of interest at secondary substations.
- 10 minute averages of voltage, real and reactive power at key points of each phase of feeders of interest.
- It is also useful to measure Total Harmonic Distortion (THD) to indicate the presence or otherwise of actual or potential power quality issues.

The accuracy of voltage and current measurements should preferably be 0.5%. We propose 10 minute average measurements should be made to IEC62053 Class 0.5 S. Where power quality issues are known or suspected to be an issue (e.g. customer reporting flicker, significant proportion of feeder power supplied by inverter connected generation) then in addition measurement of:

- Current Harmonic Distortion: Maximum, Minimum & Average over each 10 minute period for all harmonics up to 50th order + value for Total Harmonic Distortion.
- Voltage Harmonic Distortion: Maximum, Minimum & Average over each 10 minute period for all harmonics up to 50th order + value for Total Harmonic Distortion.

In order to implement bespoke Circuit Ratings:

Asset Type	Measure	Monitor
Overhead Line	Conductor Resistance per unit length @ 20C Temperature coefficient of resistance of conductor Conductor diameter Span Length Conductor Type Design Temperature Time constant of Conductor	Load Profile Wind Speed and possibly direction (not required if using P27 approach) Time period depends on the time constant of the conductor. e.g for Almond t~4 mins, whereas for Elm t~17 mins Accuracy <2%
Cable	Cable Size & Type, installation, Configuration (cable laying formation) Soil Ambient Temperature Soil Thermal Resistivity	Half Hourly Load Profile Accuracy <2%
Transformer	Mass of Transformer, windings and oil Losses at no load and rated load Difference between average oil temperature and hot spot	Half Hourly Load Profile if transformer thermal time constant is one hour or more. Oil Temperature (if Winding hot spot not available)

	temperature Type of cooling mechanism (e.g.fans)	Winding Temerature Indicator– Analogue model for Ambient temperature

Summary of requirements for HV & LV Control Purposes

This includes measurement for local autonomous control (e.g. Voltage regulation) and Automatic Network Management (ANM) schemes.

For real-time active management, we propose monitoring of: Voltage measurement accuracy to IEC62053 Class 0.5 S; Current measurement accuracy to IEC62053 Class 0.5S.

- For Primary sites (6.6kV, 11kV or 20kV)
  - Voltage, V > 100V step change updated in less than 15 seconds
- For Secondary sites 400V
  - Voltage, V > 1V step change updated in less than 15 seconds
- For all sites
  - Amps, I > 5A step change updated in less than 15 seconds
  - Real Power, P > 5kW step change updated in less than 15 seconds
  - Reactive Power Q > 5kVar step change updated in less than 15 seconds
  - Ampacity A > 5A step change updated in less than 15 seconds

Changes in measured values at a monitoring point which are lower than these indicated values would not be transferred to the control system. The control system would use the most recent previously transferred value in lieu of an updated value.

An advantage of this approach is that it minimises the time required to transfer and process monitoring data, by only transferring those measurements that have changed materially. This minimises system update latency for measurement that are changing fastest. Measurements that are not changing quickly do not require low latency. This approach will increase the responsiveness and accuracy of the control system.

To achieve the full benefits of this approach would require a change from the control system polling RTUs (i.e. pre-emptive scheduling) to a message driven (interrupt-driven) system architecture. This is in line with most modern computer operating systems.

For real-time thermal ratings (RTTR) on transformers, overhead lines and cables, measurement of the following quantities is recommended. Some of these quantities only require a representative measurement rather than continuous monitoring, which significantly reduces implementation cost of RTTR.

Asset Type	Measure	Monitor
Overhead Line	Conductor Resistance per unit length @ 20C Temperature coefficient of resistance of conductor Conductor diameter	Current Wind Speed and direction Conductor Temperature Time period depends on the time constant of the conductor.

	Span Length Conductor Type Design Temperature Time constant of Conductor	e.g for Almond t~4 mins, whereas for Elm t~17 mins Accuracy <2%
Cable	Cable Size & Type, installation, Configuration (cable laying formation) Soil Ambient Temperature Soil Thermal Resistivity	Half Hourly Load Profile Accuracy <2%
Transformer	Mass of Transformer, windings and oil Losses at no load and rated load Difference between average oil temperature and hot spot temperature Type of cooling mechanism (e.g.fans)	Half Hourly Load Profile if transformer thermal time constant is one hour or more. Oil Temperature (if Winding hot spot not available) WTI - Winding hot spot temperature (Primaries) Ambient temperature

Secondary substations typically have CTs in place for a mechanical maximum demand indicator (MDI). These can be used for a more sophisticated monitoring device satisfying the above requirements (for Planning, Design or Control purposes), provided that a device can be procured at a sufficiently low price to deliver benefit (a target cost is calculated elsewhere in this document). The marginal cost of shifting from existing CTs to Metering CTs is not high, at least for new equipment.

Monitoring Communications

System measurements were made for two purposes:

- To provide data for control systems
- To provide visibility of the network, independent of the control system, sufficient to allow detailed analysis of the efficacy of the methods deployed.

GPRS was found to be insufficiently reliable to be used for providing data to control systems. Instead ADSL links were used which were found to be sufficiently reliable.

GPRS links using single provider SIMS were found to be intermittent, insufficiently resilient to provide visibility of the network, even though the requirements (e.g. data latency) were not as onerous as required for control. The GPRS/GSM communication links to monitoring devices were upgraded to a roaming SIM which gave acceptable reliability.

There is a trade-off between monitoring periodicity and practical limitations of communication media (including cost of communications and data processing). Control systems require low latency data which requires high performance communication circuits.

A practical solution which satisfied both of these opposing constraints was identified, tested and used successfully which both minimised data latency and minimised bandwidth requirements. Low latency (15 seconds) data was communicated to the control system only if material changes in the measured quantities occurred.

Conversely, as data for planning and design purposes can be provided with high latency, a highly reliable communication circuit is not required, provided that there is sufficient local storage to buffer data when the communication link is not functional. Providing there are sufficiently frequent, planned regular visits to assets being monitored for other purposes (e.g. periodic inspection) then manual data collection might be a viable option.

Costs

IT and Communications costs added 49% to the capital cost of the monitoring equipment. Installation, commissioning and integration etc. added a further 22%. The total cost of a working monitoring system was therefore 171% of the capital cost of the equipment.

There were additional costs resulting from first use of this system, including one-off procurement, contract, systems design, acceptance testing etc. These costs are unlikely to be as high a proportion of system cost for a larger scale BAU system, should a similar system be implemented. These activities added a further 61% of the capital cost of the equipment.

In total, the cost of the monitoring system, comprising more than 150 monitoring points performing over 3 million measurements per day, was £850k, of which £336k was the capital cost of the monitoring equipment. It should be noted that the principal use of much of this monitoring equipment was for the purposes of advanced network control.

The maximum cost for a secondary substation monitor to provide data for planning purposes, if all secondary substations were to be monitored instead of using smart meter data, is £78. This figure excludes the cost of CTs on the LV Board for the incoming supply (as these will already be fitted), providing that they are sufficiently accurate. The figure is based on the value to DNOs for planning purposes from smart meters, over RIIO-ED1 and RIIO-ED2 which is reported in the ENA Analysis of smart meter benefits. It is unlikely that a case can be made for ubiquitous secondary substation monitoring for planning purposes. However, the cost of a temporary secondary substation monitoring device which could be deployed many times to identify true headroom and hence defer reinforcement of LV feeders for one or more years is likely to be significantly lower than the present value of the deferred reinforcement expenditure made possible by the use of the monitor.

Practical Issues

Initially GPRS communications was intended to be used but was found to be insufficiently reliable. A combination of ADSL and roaming SIM GPRS provided sufficient reliability, dependent upon usage of the data. See the section on findings from CLNR project in this executive summary and section 4 of the body of the report for more details.

Significant enabling works were required to ensure that the data monitoring equipment could be installed and operate successfully and reliably. This included site surveys, site designs, security improvements, IT security upgrades, and working with local authorities to allow better communication coverage via GPRS antennae.

Each site presented different site-specific and data communication challenges. Giving due consideration to these challenges at design stage greatly reduced the amount of "Monitoring" specific enabling requirements". For example the addition of an extra power socket or an additional duct were considered at the design phase.

The engineering works associated with the systems design, acceptance testing, redesign, commissioning and debugging of this first of a kind product required a significant amount of technical thinking and development time, not only in the design phases and debugging phase of the monitoring system, but also configuring the Input outputs to align with the control system.

There are unknown challenges when integrating disparate systems that only surface during the "doing" stage of integration work. The integration of the new control system, the remote control systems, the network technology and the existing infrastructure at each site included, for example, configuration of the inputs, outputs and modification of digital registers, routing cables between equipment and controllers and the configuration of auxiliary supplies.

FINDINGS FROM OTHER PROJECTS

The following projects have published closedown reports which included details of monitoring:

Project	Lead DNO	Shorthand for this report
Demonstrating the benefits of monitoring LV network with embedded PV panels and EV charging points	SSEPD	SSEPD1
Assessing Substation Measuring Equipment	WPD / UKPN	UKPN1
LV Network Templates	WPD	WPD1
Network Management on the Isles of Scilly	WPD	WPD2
Ashton Hayes Smart Village	SPEN	SPEN1
Hook Norton Low Carbon Community Smart Grid	WPD	WPD3
Low Voltage Network Solutions	ENWL	ENWL1

The following conclusions can be drawn from the closedown reports:

- The efficacy of monitoring devices which do not require an outage for installation has been proven.
- The GridKey monitoring device appears to be the preferred monitoring device. It was used in projects by four out of the five DNOs that have issued closedown reports on projects that reported on monitoring.

10 minute monitoring intervals were adopted by most of the projects.

  - Hourly data is adequate for current, real and reactive power measurement
  - For evaluating network performance, 10 minute sampling intervals should be adopted to avoid underestimating voltage impacts.
  - There is no significant benefit in adopting shorter sampling intervals, unless input to operational control systems is required.

- 0.5% accuracy is preferred for monitoring purposes and can be achieved using CTs. Flexible Rogowski coil sensors have an accuracy of around 2%. However the GridKey rigid Rogowski coil has an accuracy of 0.5%
- The preferred monitoring configuration was to measure voltage at the substation busbar and currents of each phase of every LV feeder at the substation.
- The Electricity North West Ltd Project "Low Voltage Network Solutions" developed a special cable joint which incorporated the GridKey sensor, for the purposes of monitoring down an LV feeder.
- Communication systems are inherently unreliable although UHF radio is sufficiently reliable for real-time use, all other systems require local storage to avoid loss of data when the communication channel is not available.
  - It appears that higher bandwidth and lower latency communication systems are inherently less reliable than lower bandwidth and higher latency communication systems
  - Of the systems used, PLC is the least reliable medium, GPRS is more reliable than PLC and unlicensed radio is more reliable than GPRS.
  - GPRS communication is improved by using roaming SIMs and aerial extensions.

Note that none of these projects reported the use of ADSL communication links, which were found in CLNR to be reliable and high bandwidth.

Quantities Monitored

All of these projects monitored Secondary Substations.

- All measured 3-phase busbar voltage and 3-phase current. SPEN1 and WPD3 measured current on transformer tails only. The others measured current on all LV feeders.
- WPD1 and SPEN1 and ENWL1also measured voltage at feeder end. In addition ENWL1 measured voltage and current mid-feeder and neutral current at all points where current was measured.
- WPD1 and WPD3 also monitored customer's premises.
- None of these projects have reported monitoring at HV.
- The monitors instantaneously calculated the following reported quantities (some monitors were also capable of calculating other quantities that were not reported):
  - Real Power: All projects except WPD2
  - Reactive Power: All projects except WPD1 & WPD2
  - Power Factor: UKPN1, SPEN1, WPD3 & ENWL1

- THD: SSEPD1, UKPN1 & ENWL1

Voltage and current measurement accuracy:

- to IEC 62053, Class 0.5 S accuracy: WPD1, WPD2, SPEN1, ENWL1
- ±0.5%: SSEPD1
- WPD3 did not quote an accuracy of measurement
- NPL measured the accuracy of a number of units in the lab for UKPN1 High level findings from this assessment were:
    - Flexible Rogowski coil sensors have an accuracy in the region of 2%
    - Sensors by Current (~0.1%) and Locamation (~0.2%) were the most accurate. Gridkey (~0.5%) showed good performance.
    - Nb accuracy quoted in this study is % of nominal applied current. Figures quoted are for currents between between 5% and 100% of FSD. Accuracy was significantly worse than these figures at 1% FSD.
- Overall assessment of UKPN1 was:
    - GMC i-Prosys and Gridkey products gained an overall rating of excellent. Both offered advanced monitoring functionality, were easy to install, low relative cost and Plug and Play. Gridkey had better accuracy but hard to access internal electronics, whilst the i-Prosys metrology unit was bulky.

Measurement periodicity:

- The intrinsic measurement periodicity of the monitoring instruments was not quoted in any of the reports except UKPN1. This showed a variation from 100mS to 1 min. Harmonic measurements to 30th harmonic was reported by SSEPD1 which requires t<0.33mS.
- Most projects reported the periodicity of "measurement samples". It is assumed that these are averages over the reported sample periodicity of measurements made at the intrinsic measurement periodicity of the instrument used.
- 10 minute measurement intervals are reported by all projects that reported a measurement interval, with the exception of WPD3, which used 15 minute intervals.
- ENWL1 found that:
    - Hourly data is adequate for current, real and reactive power measurement
    - For evaluating network performance, 10 minute sampling intervals should be adopted to avoid underestimating voltage impacts.
    - There is no significant benefit in adopting shorter sampling intervals, unless input to operational control systems is required.

Data Transmission Periodicity:

- All projects reported different data transmission periods. There does not appear to be a consensus.

- Some projects reported that real-time data could be streamed or polled, however there wasn't evidence that this mode of operation was extensively used in the projects.
- Some used daily or weekly data upload with local storage, others used half hourly upload (inferred from the text, it might be that half-hourly data was uploaded less frequently).
- WPD3 used 15 minute periods.
- ENWL1 initially used 1 minute intervals but changed to 10 minute intervals during the project because of issues with the data collection system.

Communications

- All projects found that all communication systems were unreliable. Some projects found that a relatively small proportion of monitoring sites produced data over sufficiently long periods to be useable.
- In terms of reliability UHF Radio > Unlicensed Radio > GPRS > PLC.
- Data storage is essential to avoid data loss due to loss of communications.
- In terms of bandwidth and latency PLC > GPRS > Unlicensed Radio > UHF Radio.
- It appears that higher bandwidth and lower latency communication systems are inherently less reliable.
- GPRS communication is improved by using roaming SIMs and aerial extensions.

The findings from these projects support the recommendations that are made in this document, e.g. recommended measurement accuracy and monitoring intervals for different purposes. Where these projects have considered aspects that were considered in CLNR, the outputs of the projects reflect the findings of CLNR. The CLNR has gone further than these projects in terms of the types of monitoring locations and use of the monitoring data. For example CLNR monitored at HV and some EHV as well as LV.

In common with the other projects, CLNR found that the reliability of GPRS was improved by using roaming SIMs but still remained unreliable. CLNR took this further and identified that GPRS with local storage is sufficient to provide data for planning or design purposes but is insufficiently reliable to be used for control purposes. None of these projects reported the use of ADSL communication links, which were found in CLNR to provide sufficiently reliable, high bandwidth links for control purposes.

2. Background & introduction

Monitoring provides a network operator with visibility that the network is performing within its capability and is able to operate within legal and regulatory limits (e.g. Statutory Supply Voltage limits). Network visibility that is required for network control is different (more onerous) in terms of accuracy, periodicity and data latency from the network visibility that is required for network design, which is different again from that required for network planning.

In the CLNR project monitoring was deployed to understand the impact of LCTs on network feeders at LV and HV. Monitoring was also deployed to understand the behaviour and impact of the smart solutions - Enhanced Automatic Voltage Control (EAVC), Real Time Thermal Ratings (RTTR), Electrical Energy Storage (EES) and Demand-side Response (DSR) – which were investigated in the CLNR project. The monitoring data was used for analysis of the network trials and Scope and Objectives.

Section 2 of this report describes typical present network monitoring practice.

Section 3 provides an overview of the monitoring that was specified, designed, installed and used in the CLNR project. It covers the methodology adopted, summarises the specifications of the monitoring equipment used at various generic locations on the network, and discusses the costs of achieving the monitoring system. References are provided to documents which provide more detail.

Section 4 reviews the findings from other LCNF projects, relating to monitoring. Each project that has published a closedown report before this report was produced is summarised using a table of key monitoring features plus a short narrative on the findings of the project, which specifically contribute to monitoring learning.

Section 5 explores the extent to which information for planning and design purposes could be provided by smart meters and what alternatives might be considered if smart meter data is not available to DNOs.

Section 6 proposes a recommended monitoring strategy for business as usual, based on the distillation of the learning from the CLNR project. It articulates an underlying philosophy to achieve cost-effective optimised monitoring, then describes conceptually how data produced by network measurements (i.e. monitoring) can be converted into the information and knowledge that is required to ensure that a distribution network can fulfil its purpose whilst operating within its physical, regulatory and legal constraints.

The requirements for planning, design & control functions of a distribution network business are drawn out, enabling the required off-line data analysis to provide information and knowledge that is required for the planning and design functions to be defined. This leads naturally to a definition of the data that is required from monitoring for the purposes of planning and design.

Two alternative approaches for on-line control, i.e. rule-based models and state estimation / optimisation models are considered. Consideration of the additional requirements of closed-loop control systems result in a definition of the data that is required from monitoring for the purpose of network control, including local control devices.

The section is concluded by a consideration of the control room function and the requirement for measurement of the control scheme itself. However, these considerations do not lead to a change in the definition of the data that is required from monitoring for the purpose of network control.

Section 7 provides a summary of the monitoring which was recommended for the CLNR project, and identifies the changes in recommended monitoring incorporating the learning generated during the project. (i.e. if I knew then what I know now....”).

2.1 Scope of this report

This work is limited to the scope of CLNR i.e.:

- From Primary Substation to Customer.
- Associated with Voltage Control, Thermal Ratings, Energy Storage and Demand-side response, plus Power Quality issues due to customer installation of Low Carbon Technologies.

It specifically does not address Fault Level or feeder reconfiguration (switching). It includes monitoring for planning, design and control including Active Network Management (ANM) schemes.

Monitoring is therefore for the purposes of one or more of:

a) To provide data for a control system.

b) To provide an independent check of performance of a control system.

c) Providing detailed, reliable, time resolved values where it is believed that there is a risk that either voltage or thermal limits may be exceeded.

d) Providing network designers with specific data, if the outputs from modelling tools are believed to be likely to be inaccurate due to input uncertainties (e.g. load profiles).

e) Providing data for the purposes of network planning.

f) Providing input data to modelling or other data processing, in order to provide information, which when combined with other information, can provide network planners, designers and control engineers with knowledge of where and when overloads and / or voltage excursions are likely to occur.

2.2 Objective of this report

To propose and cost justify an enhanced network monitoring approach, which might form the basis of a draft technical specification.

3. Typical current practice

This section describes what is typically monitored now.

3.1 Primary Substation Transformer

3.1.1 Amps

- Incoming feeders are typically monitored using protection class Current Transformers (CTs) (accurate to about 1% for normal feeder currents) with data transferred in near to real time[2] (polled) and presented in the DNOs SCADA system.
- Half hourly average real power and reactive power is typically extracted into a DNO database and used in for network design / planning purposes.
- In Northern Powergrid, for HV assessment, designers don't always have data on half hourly average real power and reactive power (often only current and volts not phase angle) for all feeders into and out of each primary substation (section 3.1 & 3.2).

3.1.2 Volts

- Busbar voltage (secondary winding side of the transformer – i.e. HV network) monitored using metering class Voltage Transformers (VTs) transferred in near to real time (polled) and presented in the DNOs SCADA system.
- Half hourly averages are typically extracted into a DNO database and used in for network design / planning purposes. SCADA systems typically do not report peak power and time of the peak during every half hour.

3.2 HV Feeder

HV Feeders are typically monitored at the Primary substation in a similar manner as the Primary Transformer.

3.2.1 Amps

- Feeder current is generally measured using CTs located in the HV switchgear – these are generally the same CTs that are used for the feeder protection, and hence a slightly lower grade of monitoring class to metering CTs (eg. Class X).
- It is typical for each feeder to be monitored at this point and for the information to be presented to the DNOs SCADA system.
- Half hourly average values are typically extracted into a DNO database and used for network design / planning purposes.
- Typically few measurements are taken along the length of a HV feeder.

[2] Detailed implementations vary, to manage scarce bandwidth. Some, e.g. Northern Powergrid - Northeast, poll; others, e.g. Northern Powergrid - Yorkshire, poll only once analogues breach configurable limits or on instruction

- Exceptions may include: locations where automation / telecontrol are installed, or through the use of conductor mounted transducers (e.g. embedded in Fault Passage Indicators) on key sections of HV overhead line, although not present practice (at least in Northern Powergrid).

3.3 HV Customer

- Metering class CTs and VTs are used to measure volts and amps for HV connected customers (with metering class accuracy dependent on the size of the load). It is typical for HV customers to be metered on a half-hourly basis, with the information provided between a day and a month behind real time to both the Energy Supplier and DNO.
- Half-hourly data is typically extracted into a DNO database and used for network design / planning purposes.

3.4 Secondary Transformer

- Most secondary transformers are not closely monitored. It is typical for ground mounted substations to include a basic, low accuracy but low cost maximum demand indicator (mechanical, analogue dial with a manually reset high-set needle), which records the peak current, usually averaged over a 30 minute period, on each of the transformer's LV phases. These readings are not taken back to the DNO control room in real-time. Readings will typically be taken when the substation undergoes its annual inspection, at which time the MDI is reset.
- It is not typical for pole mounted substations to be monitored.

3.5 LV Feeder

- Not typically permanently monitored. Temporary monitoring may be installed to provide designers with data on LV overloaded feeders

3.6 LV cut-out:

- No monitoring from the DNO, meter readings taken (or estimated) quarterly by Supplier. Increasingly HH settled, where it is HH settled data should be available to DNO.

4. CLNR Monitoring

Preparatory work was undertaken at the start of the CLNR project, to identify the specific locations for each generic type of monitoring installation that are shown in the diagram below and are described in the table below, also to produce detailed specifications suitable for procurement of equipment. The outputs of this work are captured in the following documents:

- CLNR monitoring equipment is defined in the EATL Report 78380 "Low Carbon Network Fund Tier 2 Project, Customer led Network Revolution – Monitoring Mobilisation"[3].
- Specific requirements, taking account of the network locations identified for installation of network interventions, to achieve the goal of learning outcome 3: "To what extent is the network flexible and what is the cost of this flexibility" are defined in Report 80003, "Specification for Data to be Collected for Learning Outcome 3"
- Some network interventions may give rise to concerns over whether they may have an adverse effect on the harmonics and flicker. These types of locations were identified in 80003 and further detail provided on the PQ measurement requirements were described in report 80011 "Creation of Monitoring Schedule for Test Cells 21 22 & 23".

3 Bower A (2011), Low Carbon Network Fund Tier 2 Project, Customer Led Network Revolution - Monitoring Mobilisation, EATL document 78380

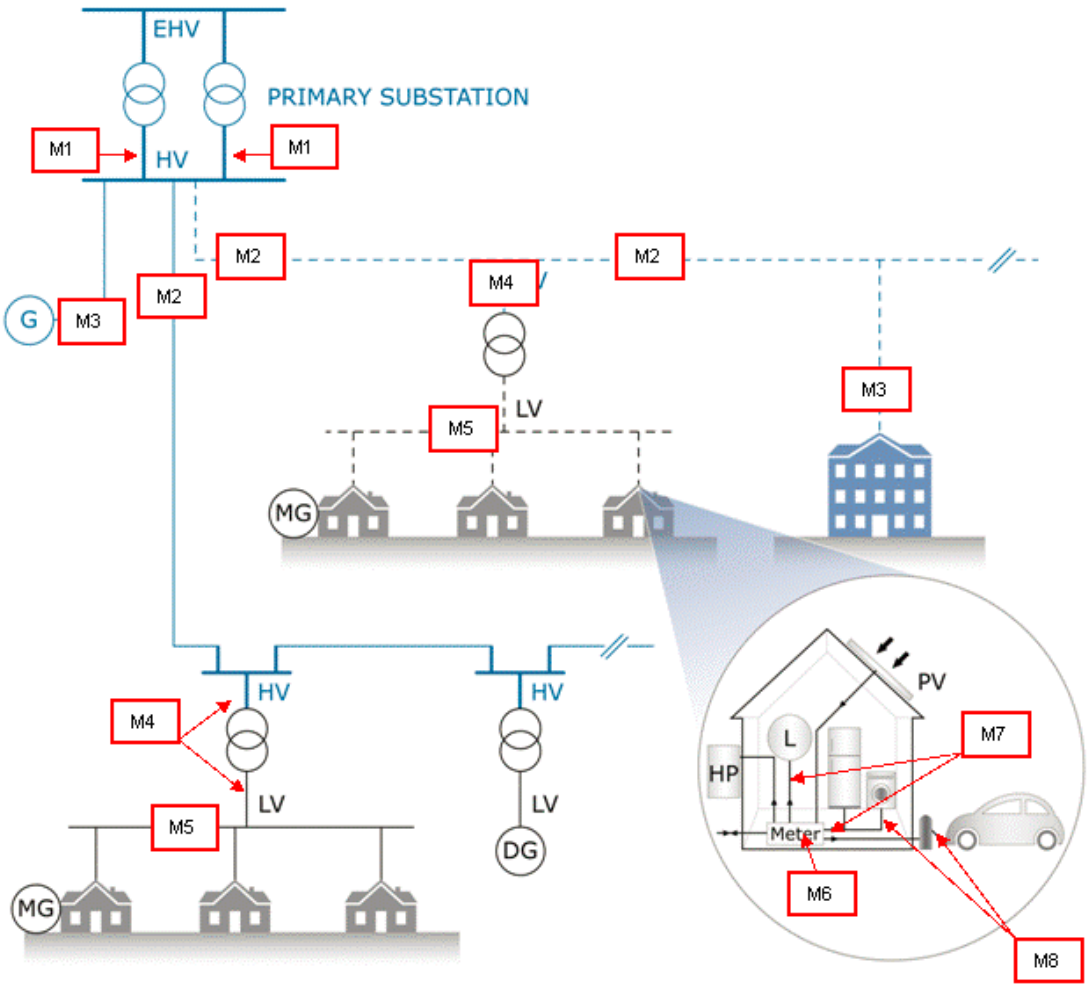

Figure 3.1 Locations of generic types of monitoring installations

Monitoring Type	Description of location and functionality
M1	Primary transformer output 3 phase monitoring of voltage and current, real reactive and apparent power
M2	HV feeder monitoring either at source or some additional secondary monitoring point along the feeder 3 phase monitoring of voltage current, real, reactive and apparent power
M3	HV Industrial and Commercial customers typically connected to metering VTs with CT measurement of metering CT secondary current, 3 phase monitoring of voltage, current, real reactive and apparent power.
M4	Secondary Distribution transformer monitoring connected to HV or LV as most convenient, typically expected to be LV connected, 3 phase monitoring of voltage current real reactive and apparent power current and voltage harmonic distortion flicker and unbalance.
M5	LV Feeder monitoring at substation or additionally at some other points on the feeder 3 phase monitoring of voltage current real reactive and apparent power current and voltage harmonic

	distortion, flicker and unbalance
M6	LV Customer's cut-out provides information about aggregate or net site load, typically provided by use of a smart meter but can be a separate monitor for non BG customers
M7	LV ring main or other dedicated circuit at or near consumer unit to provide disaggregated load monitoring of a larger load or group of loads
M8	LV appliance or equipment provides disaggregation of individual appliances or equipment

Table 3.1 Generic Monitoring functionality

Appendix 3 shows the initially specified requirements for monitoring for EAVC, EES, PV impact, EV / HP impact on the network.

Appendix 4 shows the initially specified requirements for measurements that are made at HV for control and monitoring purposes.

4.1 CLNR Monitoring Methodology

The initial intention of CLNR project was to make measurements at the point of customer connection and to integrate these with network measurements in as near as real time as possible.

British Gas had an existing programme to install smart meters underway before the start of the CLNR project. Learning from early installations resulted in the initial "phase 1" smart meter being replaced by a "phase 2" smart meter with an enhanced specification. At bid stage British Gas were working on a "phase 3" smart meter, which had further enhancements, In particular the specification of the phase 3 smart meter included voltage measurements in addition to half-hourly load measurements. British Gas planned to roll out "phase 3" smart meters during the timescales of the CLNR project and at bid stage we planned that "phase 3" smart meters would be used for in-home monitoring, in particular M6. However, constraints outside of the control of CLNR project prevented the use of these meters and additional monitoring equipment was required. British Gas supplemented the available smart meter data by installing additional monitoring systems to produce the data required to understand household consumption (eg. whole house consumption, and disaggregated loads within premises). Additional power quality (PQube) monitoring was installed in customer's premises to measure the impact of heat pumps, electric vehicles and photovoltacis. However additional network monitoring was also deployed to ensure that the minimum sufficient power quality data was being captured.

The specifications of monitoring types M1, M2, M3, M4 & M5 were supplemented to include additional PQ (full waveform capture, flicker and harmonics). PQube monitors were installed on the network as close to the point of customer connection as practically possible. The PQ data volume was found to be too high for streaming to iHost, so data was collected manually on a periodic basis.

System measurements were made for two purposes:

- To provide feedback for control systems
- To provide visibility of the network, independent of the control system, sufficient to allow detailed analysis of the efficacy of the methods deployed.

High reliability of the chosen communication system and low data latency is essential for providing feedback to control systems. It is preferable, but not essential, to have high reliability of communication and low data latency for monitoring independent of control.

The initial choice for communications was GPRS/GSM from a single supplier. Communications using a single provider SIM was found to be intermittent, insufficiently resilient for the purposes of the project. The GPRS/GSM communication links to monitoring devices were upgraded to a roaming SIM which gave more resilient, reliable communications.

The monitoring system is a fundamental backbone of the control system, it provides visibility of the network, and therefore must feed data with sufficiently low latency to permit control of the network from it outputs. To enable the control system to be able to view the network as required in both sufficient time resolution and accuracy we also enhanced the specification of the network monitoring components used by the control system and communication to them. For real-time communication from control devices to the control system the communication systems were upgraded from GPRS/GSM with a roaming SIM to ADSL which gave greater bandwidth and more reliable communications.

The pre-existing network monitoring system data feed was supplemented by the accurate voltage and current transformers of the Enhanced Network Device (END) technologies which were trialled in the CLNR project. These data were integrated into the control platform at each individual site via a Remote Distributed Controller (RDC).

Monitoring data from the enhanced network devices (END's) which were installed in CLNR, i.e. Voltage regulators, Tap changing transformers, Switched capacitors, Energy storage and thermal rating equipment was fed to remote and central control processors, either by a public network communications platform alone or combined with the existing SCADA networks.

Figure 3.2 Left to right: Link box monitoring, link box configuration and Substation monitoring,

The following table gives the characteristics of each type of monitoring deployed and the communications which were used for that type of monitoring.

Table 3.2 Summary of monitoring in the CLNR project

Monitoring Type	Device used and No. of units fitted	Quantities monitored	Sensors	Accuracy	Data Transmission	Data Communication	Comment
M1 Primary	7 SuperTapp N+ 5 Fundamentals DAM* MR Trafoguard	line voltage per phase Bi-directional RMS L2 current. Real Power and Reactive Power Tap position Temperature	Current – CTs EN60044-1 class 0.5S 1600/5, 1200/5 800/5 400/5 & 300/5 Interposing clip on CT on outgoing feeders 300/5 or 400/5 CTs Thermocouple	Voltage: to IEC 62053, Class 0.5 S Current to Class 0.5S Thermocouples: ±0.25%	15 second intervals with dead band of greater than 100v^	Fixed line firewall secured broadband ADSL Existing DNO SCADA	^Values extracted from AVC relay Alarms fed over SCADA link
M2 HV feeder monitoring	1 Nortech Envoy	Bi-directional RMS L2 current. Real Power and Reactive Power	Interposing clip on CT	Current to Class 0.5S	1 minute averaged over 15 second intervals	Roaming GPRS to iHost server	
M3 HV Industrial and Commercial	1 Direct metered 5 Commercial aggregator sites	Real Power	Commercial Metering Modbus Load feed	Voltage: to IEC 62053, Class 0.5 S Current to Class 0.5S	30 minute averaged over 1 minute intervals 1 minute averaged Modbus data link for loading information	SCADA BMS or GPRS	results obtained from commercial metering in place with energy supplier and commercial aggregator
M4 Secondary Distribution transformer monitoring	3 Tapconn 230 20 Nortech Envoy 2 Kelvatek gateway	RMS phase voltage and line to neutral voltage per phase Bi-directional RMS currents per phase and neutral current. Real Power and Reactive Power Phase angle per phase Tap position 1st to 50th Harmionic Flicker Temperature	Fused voltage take off, Rogowski coils PQube power quality meter ND metering solution rail 350 Novus Digirail Temperature sensors	Voltage: to IEC 62053, Class 0.5 S Current to Class 0.5S Thermocouples: ±0.25%	15 second intervals with dead band of greater than 1v^ 1 minute averaged over 15 second intervals	Fixed line firewall secured broadband ADSL Roaming GPRS to iHost server	^Values extracted from AVC relay

M5 LV Feeder monitoring	3 Nortech Envoy 32 Prysmian smart link box	RMS Phase voltage and line to neutral voltage per phase Bi-directional RMS currents per phase and neutral current. Power factor per phase Phase angle per phase 1st to 50th Harmionic Flicker	Fused voltage take off Rogowski coils Conventional VT / CT in link box Kelvatek Bidoing	Voltage: to IEC 62053, Class 0.5 S Current to Class 0.5S	1 minute averaged over 15 second intervals	Roaming GPRS to iHost server	

The figure below shows data flow around the overall monitoring system:

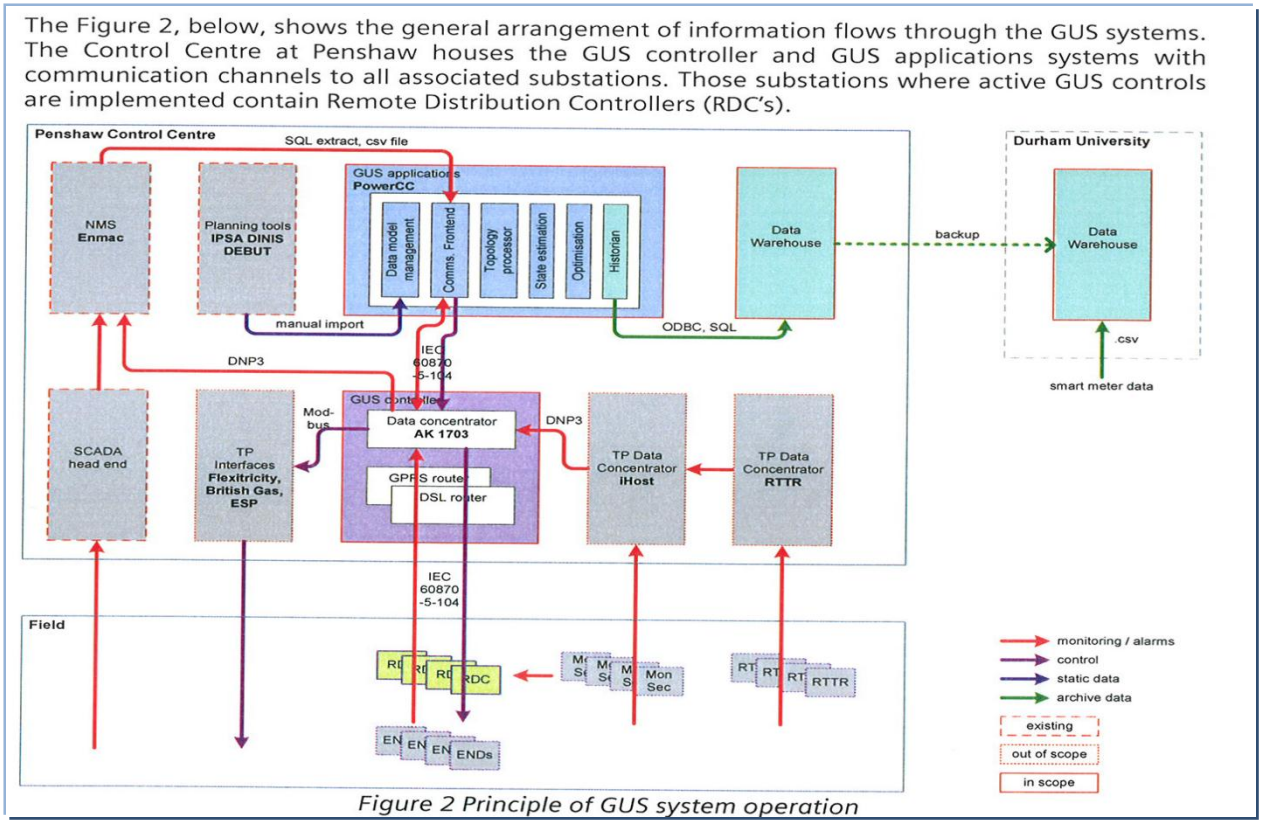

Figure 3.3 flow of data between components of the control system

4.1.1 END to RDC

For all sites where possible we interfaced to an enhanced voltage control (EAVC) device (e.g. the SuperTapp N+, TapCon230 and PowerStar). Measurements of Volts, Amps, P and Q were taken directly from the EAVC device. On these sites the only values we gathered from the ENVOY is the Ambient Temp. Conversely for the EES sites where the direct interface was complicated all values were obtained from the monitoring platform.

The accuracy of the RDC control algorithm was improved by increasing the measurement frequency in order to minimise risk of errors or latency increment. For example the SuperTapp N+ devices, interfacing via the dedicated 'Canbus to DNP3.0' ENVOY, the transmission rate of the analogues was increased in the ENVOY from 60seconds to 15seconds. For the TapCon230 and the PowerStar the refresh of value transferred to the RDC is almost instant and is not averaged. For the EES sites the ENVOY refreshes the values every 15seconds and is averaged over this period.

4.1.2 RDC to Central control

The accuracy of a state estimator can be improved by increasing the measurement frequency. However as measurement frequency increases, the challenges and costs of communication systems increases and practical limitations (including cost) can constrain the measurement frequency. A balance between these requirements was achieved for the transfer of values from the RDC to Central control by applying thresholds in order to reduce the volume of data. Changes within these thresholds are not material and

therefore are not transferred to the control system. Changes above these thresholds are material and therefore are transferred to the control system. The values we applied are as follows: -

- For the primary sites (6.6kV, 11kV or 20kV)
  - Voltage, V > 100V step change updated in less than 15 seconds
- For the Secondary sites 400V
  - Voltage, V > 1V step change updated in less than 15 seconds
- For all sites
  - Amps, I > 5A step change updated in less than 15 seconds
  - Real Power, P > 5kW step change updated in less than 15 seconds
  - Reactive Power Q > 5kVar step change updated in less than 15 seconds
  - Ampacity A > 5A step change updated in less than 15 seconds

4.1.3 Monitoring systems using Nortech iHost

Some of the inputs to the control system were communicated via iHost rather than a Siemens RDC. This was for practical reasons, such as to obtain control inputs from the real-time thermal rating monitoring systems that are located at rural sites, where it was impossible to obtain a cost effective ADSL link,

In addition, as described in section 4.1, some monitoring was deployed in CLNR to provide visibility of the network, independent of the control system.

A Nortech iHost system and associated RTUs was used for both of these purposes.

This section provides detail of the methodology used within CLNR for monitoring systems which were NOT connected directly to a Siemens RDC, it covers the communication protocols between components within the Nortech monitoring configuration:

Temperature sensor modules and Rail 350 Power Meters are connected to a Nortech Enovy unit via an RS-485 ModBus RTU link. PQube Meters are connected to a Nortech Enovy unit via a ModBus TCP link.

Each parameter is read from the various hardware modules every 15s, and a 1 minute average of these 4 readings is calculated in the Envoy. This average is time-stamped in the Envoy and then sent to the iHost server using DNP3.0 protocol over TCP/IP. For some outstations the TCP/IP link is sent using GPRS, others, if required for control purposes, is sent using ADSL.

The iHost server stores the time stamped event logs in an SQL database, and passes the events required for control purposes to the iHost SCADA interface, this provides the events in IEC61870-5-104 protocol to the GUS central system.

Additionally an export task on the iHost server creates a CSV file every 24 hours and uploads it to the Data Warehouse server for import. The data is also retained in the iHost server database where it can be plotted as trends, as required.

There is no dead-banding or compression in use, every value captured from the outstations is saved and retained.

4.2 CLNR Monitoring Equipment Specifications

Detailed procurement specifications were created to consider monitoring at specific point on out network to allow the control system to reference the network measurements to orchestrate with pieces of control apparatus (e.g. Regulators, Tap changers, Capacitor banks) to ensure tolerance constraints are identified and controlled

Three specific product specifications were developed along with that of the control system:

Document	Title	Monitoring Type
NPS/007/015	Technical Specification For HV Industrial & Commercial Customer Monitoring Equipment (M3)	M3
NPS/007/016	Technical Specification For network monitoring of secondary substations (M4)	M4
NPS/007/017	Technical Specification for LV Feeder Monitoring Equipment	M4 M5
NPS/007/018	Technical Specification for the Grand Universal Scheme (GUS)	M1 M2, M3, M4 M5

These specifications satisfied the monitoring requirements shown in Table 3.1 Communications experience.

This section shows the performance of ADLS and GPRS links.

Rise Carr ADSL availability statistics.

PERIOD	AVAILABILITY
Today	100.000 %
Yesterday	100.000 %
Last 7 Days	100.000 %
Last 30 Days	99.941 %
This Month	100.000 %
Last Month	99.939 %
This Year	98.877 %

Glanton regulator rural ADSL availability statistics.

PERIOD	AVAILABILITY
Today	100.000 %
Yesterday	100.000 %
Last 7 Days	100.000 %
Last 30 Days	99.982 %
This Month	100.000 %
Last Month	99.981 %
This Year	95.102 %

Over a 12 month period, an urban ADSL link had nearly 99% availability and a rural ADSL link had better than 95% availability. The availability for a single day is often 100%.

The table below shows GPRS availability in terms of number of drop-outs of the link for Akeld (Rural) and Beaumont reservoir (Urban).

Substation	Location setting	Communications drops outs per month	Communications drop out > 5minutes per month
Akeld SS	**Rural location**	**305**	**14**
Beaumont Reservoir SS	**Urban location**	**192**	**3**

In general, an urban link had better quality of signal than a rural link. However, both showed periods of improved signal and periods where the signal was materially worse.

4.3 CLNR Monitoring Costs

This section displays a detailed breakdown of costs attributed to the design, modification and installation of the monitoring system that has been configured on the CLNR project.

The cost categories have been chosen to best illustrate the areas of work undertaken to safely install, secure and commission and operate the equipment in a central control room and on a group of UK DNO owned substations.

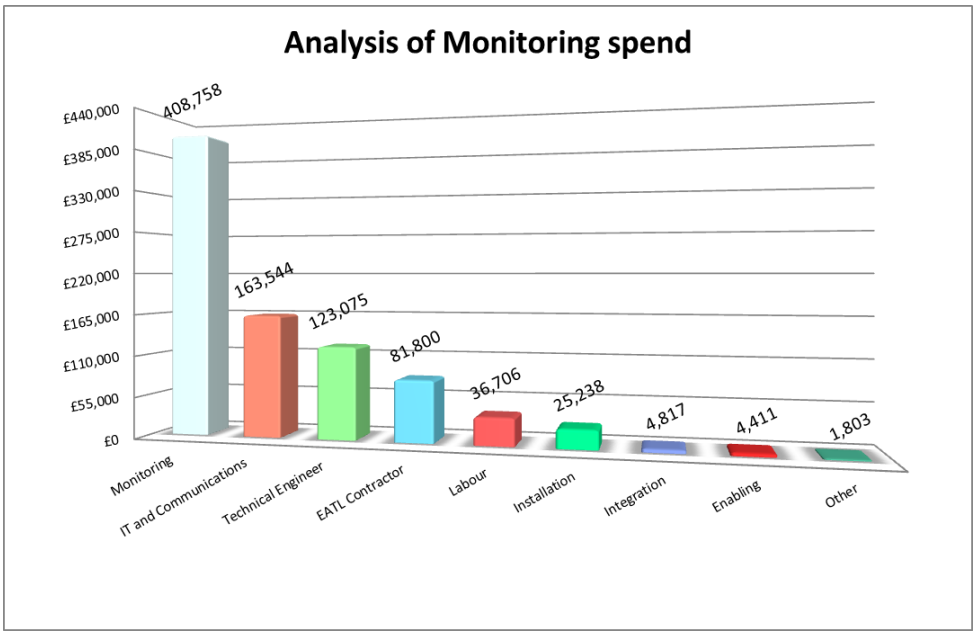

Cost Categories	Original Budget (£)	Total spend (£)	Budget v Spend Variance %
Monitoring	355,000	408,758	15.1%
IT and Communications	100,000	163,544	64%
Labour	(included in monitoring costs)	36,706	
Installation	(included in monitoring costs)	25,238	
Integration	(included in monitoring costs)	4,817	
Enabling	(included in monitoring costs)	4,411	
Other	(included in monitoring costs)	1,803	
Total Monitoring Costs	**478,000**	**645,277**	**35%**
EATL contractor	103,000	81,800	-21%

Technical Engineer	53,000	123,075	132%
Contingency	50,000	-	-100%
Total	**684,000**	**850,151**	**24%**

4.3.1 Monitoring - Prime Equipment

The primary equipment category is wide ranging and captures the actual costs associated with the contract tendered to achieve the specification for the entire monitoring system, its full or partial warranty support as delivered and deployed on the CLNR project. Logistics, haulage, delivery duty and project management of the assisted installation and commissioning are included.

A key requirement of the control system and the architecture of a smarter grid, is visibility of network assets, by monitoring in as near to real time as is possible. Monitoring comes in many forms from the simplest current transducer up to full waveform capture of line and phase values at key strategic network locations, which feed the data that enables the control platform to accurately assess the network and issue appropriate control commands. The project expended £409k on over 150 monitoring stations feeding over 3 million data points a day.

It is very important to note that this is a prototype development system, over 4 particular test electricity networks, and the monitoring platform had little redundancy built in to it.

4.3.2 IT and Communications

Information technology and the communication configuration required to enable, fast, reliable, secure, communications to distributed substation sites was a key enabler to the smart grid controller. A variety of solutions were required, from mobile technology like GSM and GPRS, ADSL and fibre communication to secure licenced radio that were all engineered to cover a number of different protocols including standards like IEC61850 and DNP3.0. Each required security enabled by advanced routing, firewall protection and isolated front end processors. The cost of the design, development and configuration of our relatively small scale test across one central control system and 14 controlled hubs was £163k.

4.3.3 EATL Contractor

The EATL contractor costs relate solely to fees incurred during the preparation for procurement, contract drafting and execution and configuring the test cells for each network trial with the integrated control system, including defining the system specification, defining the location and quantity of monitors to be installed and clarifying technical uncertainties.

4.3.4 Enabling works

This category captures the prime enabling activities carried out to allow modification to each of the sites and to the network technologies. This includes site surveys, site designs, security improvements, IT security upgrades, and even working with local authorities to allow better communication coverage via GPRS antennae. Each site required specific enabling works and specific considerations for data communication.

Consideration of issues at the design phase reduced the amount of technology specific enabling works that was required to integrate the variety of technologies that were used. Examples include the addition of an extra power socket or an additional duct.

4.3.5 Technical Engineer

These costs were for engineering works associated with the systems design, acceptance testing, redesign, commissioning and debugging of this first of a kind product. Costs were heavily affected by the amount of technical thinking and development time that was initially required in the design phases and debugging phase of the monitoring system and the configuration of the Input outputs to align with the control system. These costs are likely to be similar for the development of similar sized test networks, but should reduce providing the issues addressed are common across the network. However this would require much more support should the system scale-up to cover the full distribution network reveal additional issues.

4.3.6 Labour

This is the measure of CLNR related activities of the Northern Powergrid Program Delivery department; it is inclusive of work done by field engineers, fitters, jointers, linesmen, craft attendants, safety auditors, supervisors, quality inspectors etc.

4.3.7 Installation and civil works

Installation and civil costs are a combination of activities associated with the physical installation of the equipment at the control room and at the remote substations, which are not covered by a contract with an equipment supplier and not performed by Northern Powergrid. This work forms part of the integration between the new control system, the remote control systems, the network technology and the existing infrastructure at each site. Typical examples would be the configuration of the input outputs and modification of digital registers, routing cables between equipment and controllers and the configuration of auxiliary supplies.

4.3.8 Integration

These are four activities associated with integrating the components of the CLNR active network management scheme, including configuration, programming, debugging and acceptance testing.

5. Findings from other projects

The following LCNF projects have included network monitoring:

Project	Funding Source	Lead DNO	Start	Finish
Demonstrating the benefits of monitoring LV network with embedded PV panels and EV charging points	Tier 1	SSEPD	Sep-10	Oct-11
Assessing Substation Measuring Equipment	Tier 1	WPD / UKPN	Dec-11	Jun-13
LV Network Templates	Tier 2	WPD	Apr-11	Jul-13
Network Management on the Isles of Scilly	Tier 1	WPD	Aug-12	Aug-13
Ashton Hayes Smart Village	Tier 1	SPEN	Jan-12	Oct-13
Hook Norton Low Carbon Community Smart Grid	Tier 1	WPD	Feb-12	Oct-13
Low Voltage Network Solutions	Tier 1	ENWL	Apr-11	Mar-14
Low Carbon London	Tier 2	UKPN	Jan-11	Dec-14
Customer-led Network Revolution	Tier 2	NPg	Jan-11	Dec-14
Active Network Management with Hydro Generation	Tier 1	SPEN	Mar-12	Dec-14
Flexible Networks for a Low Carbon Future	Tier 2	SPEN	Jan-12	Dec-14
Flexible Plug & Play	Tier 2	UKPN	Jan-12	Dec-14
Fault Current Active Management	Tier 1	ENWL	Sep-13	Mar-15
Low Voltage Integrated Automation	Tier 1	ENWL	Mar-13	Mar-15
Low Voltage Protection and Communications	Tier 1	ENWL	Sep-13	Mar-15
Smart Urban Low Voltage Network	Tier 1	UKPN	Jul-12	Mar-15
FALCON	Tier 2	WPD	Nov-11	Sep-15
My Electric Avenue (I^2EV)	Tier 2	SSEPD	Jan-13	Dec-15
Distribution Network Visibility	Tier 1	UKPN	Jan-12	Dec-15
Flexible Urban Network – Low Voltage	Tier 2	UKPN	Jan-14	Dec-16
New Thames Valley Vision	Tier 2	SSEPD	Jan-12	Mar-17
Smart Street (eta)	Tier 2	ENWL	Jan-14	Dec-17

Short descriptions of the projects, the quantities monitored and whether LV, HV or both can be found in appendix 1. The source of this information is published documents, either the closedown report where this is available, or the project proforma. More details are available on those projects that have published a closedown report. Information from the closedown reports which would inform a specification for network monitoring is summarised in the following sub-sections. Information from these reports that does not directly relate to network monitoring equipment is outside of the scope of this document.

The following conclusions can be drawn from the closedown reports:

- The efficacy of LV monitoring devices which do not require an outage for installation has been proven.
- The GridKey monitoring device appears to be the preferred monitoring device. It was used in projects by four out of the five DNOs that have issued closedown reports on projects that reported on monitoring.

10 minute monitoring intervals were adopted by most of the projects.

  - Hourly data is adequate for current, real and reactive power measurement
  - For evaluating network performance, 10 minute sampling intervals should be adopted to avoid underestimating voltage impacts.
  - There is no significant benefit in adopting shorter sampling intervals, unless input to operational control systems is required.

- 0.5% accuracy is preferred for monitoring purposes and can be achieved using CTs, however installation of CTs requires an outage. Rogowski coils can be installed without an outage. Flexible Rogowski coils have an accuracy of around 2%. However the GridKey rigid Rogowski coil has an accuracy of 0.5%.
- The preferred monitoring configuration was to measure voltage at the substation busbar and currents of each phase of every LV feeder at the substation.
- The Electricity North West Ltd Project “Low Voltage Network Solutions” developed a special cable joint which incorporated the GridKey sensor, for the purposes of monitoring down an LV feeder.
- Communication systems are inherently unreliable although UHF radio is sufficiently reliable for real-time use; all other systems require local storage to avoid loss of data when the communication channel is not available.
  - It appears that higher bandwidth and lower latency communication systems are inherently less reliable than lower bandwidth and higher latency communication systems.
  - Of the systems used, PLC is the least reliable medium, GPRS is more reliable than PLC and unlicensed radio is more reliable than GPRS.
  - GPRS communication is improved by using roaming SIMs and aerial extensions.

5.1 Demonstrating the benefits of monitoring LV network with embedded PV panels and EV charging points

The project demonstrated the installation of cost-effective 11kV LV substation monitoring devices with zero CML losses. It developed live working practices for installation of equipment and evaluated systems from three different manufacturers.

Network Element Monitored	LV Substation: Current - Each LV feeder and LV Busbar Voltage - Busbar **feeder at 11kV / LV substation**
Devices used	CURRENT Group LVA / Opengrid, GE Energy C650 relay, Gridkey MCU520 plus GH600-D sensor
Quantities measured	3 phase Directional Current, 3 phase Voltage, phase angle
Sensors	Current - Rogowsky Coil, Voltage – direct connection or Insulated G Clamp (Martindale Electric Ltd.)
Quantities instantaneously calculated	Neutral Current, Real Power, Reactive Power, Harmonic Content (THD),
Measurement Accuracy	Voltage ±0.5% , Current ±0.5% ; Metering Standards Class B, Class 1, Class 2 Harmonic accuracy 30th harmonic magnitude ±1.5% phase ±2.5°
Measurement Periodicity	Not reported However, 30th Harmonic requires t < 0.33mS
Data Transmission	Mode 1: Streamed measured and instantaneously calculated values; or Mode 2: Half Hour average of Current (min, mean, max), Voltage (min, mean, max), Energy, Reactive Energy, Harmonic Content; or Mode 3: Alarms.
Data Communication	GPRS to monitoring equipment manufacturer's bespoke host system.

Main findings of the project:

Demonstrated that current and voltage sensors can be installed by a safe method without interrupting customer supplies using three different manufacturers' products.

Monitoring provides visibility of load curve.

Phase imbalance can be easily identified and where imbalance is large significant headroom can be released by reducing imbalance.

Available capacity for additional connections of EVs and PVs was determined.

Cellular communication signal strength was poor within enclosed substations, requiring aerial extensions. A roaming SIM minimised risk of poor signal strength from a single mobile operator.

A minimum storage period of 14 days was sufficient to ensure half hourly data was not lost due to communication failures (two of the three manufacturers provided no less than 30 days).

5.2 Assessing Substation Measurement Equipment

This project evaluated a range of LV monitoring solutions under laboratory conditions at the National Physical Laboratory and in the field on DNO low voltage networks, equipping 28 substations with sensors from 7 different manufacturers.

Network Element Monitored	LV feeder at 11kV / LV substation
Devices used	GMC i-Prosys, Sentec/Selex (GridKey), Current Group. PowerSense, Locamation, Ambient, Haysys
Quantities measured	3 phase Current, 3 phase Voltage
Sensors	Current - Rogowsky Coil, Split Core CT Voltage – direct connection or Insulated G Clamp
Quantities instantaneously calculated	Neutral Current, Real Power, Reactive Power, Power factor, Total Power, THD
Measurement Accuracy	See commentary below
Measurement Periodicity	GridKey: 1min GMC i-Prosys: 1sec Current Group: 100mS Ambient: 1min Haysys: 1sec PowerSense: 200mS Locamation: "Continuous"

Data Transmission	Not reported
Data Communication	GPRS to monitoring equipment manufacturer's bespoke host system.

Main findings of the project:

Flexible Rogowski coil sensors has accuracy in the region of 2%.

Sensors by Current (~0.1%) and Locamation (~0.2%) were the most accurate. Gridkey (~0.5%) showed good performance. Nb measured accuracy is % of nominal applied current. Figures quoted are for currents between 5% and 100% of FSD. Accuracy was significantly worse at 1% FSD.

GMC i-Prosys and Gridkey products gained an overall rating of excellent. Both offered advanced monitoring functionality, were easy to install, low relative cost and Plug and Play. Gridkey had better accuracy but hard to access internal electronics, whilst the i-Prosys metrology unit was bulky.

5.3 LV Templates

The project developed LV Network Templates to assist network planners to accurately estimate the load and voltage at any given secondary substation without the need for monitoring.

The project monitored 824 LV substations, 3600 LV feeder-ends plus 525 domestic PV installations.

Network Element Monitored	11kV / LV substation, LV feeder-end. PV installations
Devices used	Substation: GE KV2C Meter, GE SD4 Radio LV Feeder-end: EDMI Mk7c & Mk10A GPRS Meter, GE SM110 meter (PLC), GK PLC-S8-P(V1) Node PV installations: EDMI Mk7c GPRS Meter
Quantities measured	Substation: Current, Voltage LV Feeder-end: Single phase Voltage
Sensors	Current – CTs EN60044-1 class 0.5S 1600/5, 800/5 & 400/5 Voltage – direct connection
Quantities instantaneously calculated	Real Power The substation monitoring device was capable of the following (although its use was not reported): Phase Sequence, Voltage Phase Angle, Current Phase Angle, Neutral Current, Real Power, Reactive

	Power, Power factor, Apparent Power, Voltage Sags & Swells, Harmonic Distortion per voltage and per current phase, Outtake counter, date & time of last outage, Cumulative Power outage Time, THD
Measurement Accuracy	Voltage: to IEC 62053, Class 0.5 S accuracy Current to Class 0.5S accuracy
Measurement Periodicity	Voltage, Samples taken at 10 second intervals, averaged to 10 minute values. Current: Not reported, believed to be the same as voltage
Data Transmission	Data transferred from the monitors / meters on a weekly basis. Substation Concentrator can hold up to 144 half-hourly demands which can be pulled "on demand" Regional Concentrator can poll the substation data concentrator at 5 minute intervals to obtain "real-time" loading data Regional Concentrator can poll the substation data concentrator on receiving request from ENMAC/PowerOnFustion System to obtain "real-time" Voltage, Current, Quality of Supply, Customer on/off supply
Data Communication	Substation: UHF radio to access point (normally a primary substation) then pulled to GE's bespoke host system (SMOS) Feeder–end (EDMI monitor): GPRS to GE's bespoke host system (SMOS) Feeder–end (GE Meter): PLC to WPD STIP server (not reported how PLC/ STIP server interface was achieved) Protocols: Standard, nationally agreed protocols e.g DNP3, IEC870 or an approved meter protocol.

Main findings of the project:

Statistical case for using a limited number of PV feed-in tariff meters.

Customer uptake of hired-wired Voltage Monitors, required to monitor LV feeder ends, was lower than expected (51%). Other methods, including installation in street furniture were deployed. A plug-in GPRS monitor had better uptake than the "hard-wired" version.

Communications to "feeder-end" monitors by plc were subject to a feed length constraint of 250m. As a consequence most of these monitors used GPRS communication.

Data was successfully retrieved from 87% of monitoring installations.

5.4 Network Management on the Isles of Scilly

The project established real-time monitoring on all of the distribution substations on the Isles of Scilly in order to maximise the use of generation facilities to secure supplies to the islands. These generation facilities are expected to be initially PV, followed by Wave power and possibly generation from waste disposal.

63 LV substations had monitoring installed.

Network Element Monitored	Transformer LV Tails
Devices used	Substation: GE SM300 Meter, GE KV2C Meter, GE SD4 Radio, EntraNet radio
Quantities measured	Current, Voltage,
Sensors	Current – CTs EN60044-1 class 0.5S 1600/5, 800/5 & 400/5 Voltage – fused direct connection
Quantities instantaneously calculated	The substation monitoring device was capable of the following (although its use was not reported): Phase Sequence, Voltage Phase Angle, Current Phase Angle, Neutral Current, Real Power, Reactive Power, Power factor, Apparent Power, Voltage Sags & Swells, Harmonic Distortion per voltage and per current phase, Outtake counter, date & time of last outage, Cumulative Power outage Time, THD
Measurement Accuracy	Voltage: to IEC 62053, Class 0.5 S accuracy Current to Class 0.5S accuracy
Measurement Periodicity	Voltage, Not reported. Current: Not reported.
Data Transmission	Data transfer for normal usage not reported, but believed to be half hourly. Each substation monitor can be individually polled to retrieve the real-time measurements current being recorded
Data Communication	Mixture of Power Line Carrier (PLC) as per IEEE1901, EntraNet radio (2.4GHz) for 106kps for shorter links, and UHF radio (450MHz) for 19.2kps links between the islands.

	Most but not all substation monitors communicated using plc to the next upstream substation (some used GE SD4 radio), then EntraNet to an upstream data concentrator, then UHF radio. To a single point on the islands, thence by optical fibre and microwave links to WPD mainland network.

Compact nature of the substations did not lend itself to fitting CTs on each individual feeder. Point load information at each substation was felt to be sufficient for the application.

The substation monitoring installations included battery backup sufficient for 6 hour power in the event of an LV interruption.

HV Outages were required for installation of the PLC communication for monitoring and the ring CTs for current measurement.

Having real-time information on the transformer load profiles will enable future initiatives to be fully informed and supported.

The 400/5 CTs were over specified for the output of the smaller 16kVA single phase transformers, impacting on the accuracy of measurement and the reliability of the results for some substations.

System availability of both types of radio proved to be very good, with limited interference. However, when systems experienced downtime they locked out and needed a visit to perform a local hard reset.

Unlicensed radio is an effective solution.

The 9.2kps limitation of SD4 radios is sufficient for metering data but not real-time data.

PLC provided links with a latency between 5mS and 35mS and bandwidths between 400kbps and 7.5Mbps, considerably better than the radio links. However, for some links the performance of BPL falls below the required standards for some time periods, for unknown reasons. More research is needed to understand the impact of load types on PLC performance.

5.5 Ashton Hayes Smart Village

The project supported Ashton Hayes towards its goal of becoming a carbon neutral community through examining the feasibility of connecting a range of low carbon technologies to the network.

Two ground mounted transformers and two pole mounted transformers were monitored.

Network Element Monitored	Transformer LV Tails LV Feeder-end
Devices used	eMS sub.net systems, IMVC-LV input modules,
Quantities measured	Transformers: Current, Voltage

	LV Feeder-end: Voltage
Sensors	Current: Three phase Rogowski coils Voltage: Not reported.
Quantities instantaneously calculated	Apparent Power, Real Power, Reactive Power, Power factor,
Measurement Accuracy	Voltage: to IEC 62053, Class 0.5 S accuracy Current to Class 0.5S accuracy
Measurement Periodicity	Voltage, 10 minute intervals Current: 10 minute intervals
Data Transmission	Daily
Data Communication	GPRS

Monitoring equipment specification is in Appendix B of the closedown report, but this is not at the location on SPEN website which is referenced in the report.

Monitoring worked successfully, resulting in a transformer, which was overloaded, based on standards, being identified as working within its capability (using a RTTR algorithm).

Headroom for connecting LCTs was identified.

Reliability of the monitoring equipment and data transfer was not sufficiently good for BAU.

5.6 Smart Hooky

The project explored customer engagement and incentive programmes alongside community-wide energy monitoring. The project deployed a powerline carrier communications network at LV and developed an in-house designed LV substation monitoring solution utilising off-the-shelf components with a trial UHF radio backhaul system.

Eleven substations were monitored plus 46 load monitors in customer premises.

Network Element Monitored	Each phase of individual LV Feeders at HV/LV substation. Customer Premises: Current
Devices used	Substation: Haysys Rogowski Coli interface, Scheider PM9 Power Meter, Schneider Talus T4E RTU, Radius 221e UHF radio. Customer Premises: Bespoke device produced for project by AND Technology Ltd.

Quantities measured	Current, Voltage, Frequency
Sensors	Substation: Current – Rogowski coils Customer Premises: Current – Clip-on CT Voltage – direct connection
Quantities instantaneously calculated	Real Power, Reactive Power, Neutral Current, Power factor,
Measurement Accuracy	Not reported Not Reported
Measurement Periodicity	Voltage, 15 minute intervals. Current: 15 minute intervals.
Data Transmission	15 minute intervals
Data Communication	Substation: UHF Radio (454.55 MHz) 9600 bps, using DNP3 protocol. Customer Premises to substation: PLC

PLC communications can work on UK LV networks with an average success rate of 50-75% (success defined as at least one successful data transmission per day).

Radio communications from substations had reliability in excess of 95%.

No data storage was included. This meant that loss of communications resulted in loss of data.

Monitoring PV installations using a simple CT which was not capable of detecting the direction of power flow resulted in generation being interpreted as load.

Voltage measurement was not included in the customer premises monitor but would be included if the project was repeated.

Not all sites have space to install standalone GRP housings. Smaller rated cabinets are therefore required. An integrated solution would reduce installation time. RCD switches were prone to operation making the system unreliable. Data storage is essential.

5.7 Low Voltage Network Solutions

The project developed procedures to install LV monitors without customer interruptions. It aimed to monitor 200 LV networks covering over 1000 feeders in order to increase understanding of LV networks.

Network Element Monitored	Each phase of individual LV Feeders at HV/LV substation.

Devices used	Substation: Nortech Envoy DNP3, GridKey MCU
Quantities measured	RMS line to neutral voltage per phase Bi-directional RMS currents per phase and neutral current.
Sensors	Substation: Current – 25% conventional Rogowski coils, 75% GridKey GridHound Rogowski coils Substation: Voltage – insulated fused G-clamp connection Feeder mid- and end-point: Current - "Smart Joint" developed by projects based on Gridhound sensors. Feeder mid- and end-point: Voltage – Standard service joint.
Quantities instantaneously calculated	Power factor per phase, Phase angle per phase Real Power and Reactive Power (per phase and neutral), THD of current,
Measurement Accuracy	IEC 62053-21 Class 1 (active energy), Class 2 (reactive energy) Not measured in project, but report refers to accuracy measurements in project reviewed in section 5.2
Measurement Periodicity	Voltage, initially 1 minute, changed to 10 minute intervals. Current: initially 1 minute, changed to 10 minute intervals.
Data Transmission	initially 1 minute, changed to 10 minute intervals
Data Communication	GPRS to iHost server

A "Smart Joint" was developed to monitor voltage and current at a cable midpoint.

Due to problems due to unreliability of monitoring equipment and communications, rather than the planned 200 networks of 1000 feeders, the project only had data of sufficient quality over sufficient time periods to assess 25 networks (128 feeders) although cumulatively nearly 10,000 days of data from 136 substations and 430 feeders was collected.

1 minute measurement and 1 minute data transmission period overloaded the data collection system. This was reduced to 10 minute.

Both voltages and phase currents of all phases should be monitored at the substation end of the feeders.

For evaluating network performance, 10 minute sampling intervals should be adopted to avoid underestimating voltage impacts. There is no significant benefit in adopting shorter sampling intervals, unless input to operational control systems is required.

For voltage purposes, feeder end points should be monitored. Monitoring mid points do not necessarily provide more critical information.

Hourly data is adequate for current, real and reactive power measurement.

Balanced load assumption underestimates the impacts of LCT in LV networks

6. DNO monitoring solutions vs third party monitoring solutions

Short periodicity, data latency, on-line monitoring of power flows and voltages is required for control systems and ANM systems. On-line monitoring is not needed for Planning and Design, which can use high latency data with a longer periodicity.

This section explores the extent to which information for planning and design purposes could be provided by smart meters and what alternatives might be considered if smart meter data is not available to DNOs. Smart meters are not considered to be suitable for on-line monitoring of networks for control purposes because of the high data latency of the national communications system which has been chosen to collect smart meter data.

There are two future scenarios to consider:

- Ubiquitous smart/advanced/etc. meters, profile data and alarms communicated to DNOs
    - Hopefully this will be the situation when the smart meter roll-out is completed. This was scheduled for the end of 2019[4] and is currently scheduled for the end of 2020[5], impacting approximately 30 million premises
- No data available from smart meters
    - This is the situation today, except for a small number of trial installations. The requirements for monitoring in this scenario will fall away, probably network area by network area, during the smart meter rollout
    - The planned schedule for smart meter Roll-out is shown in the graph below[6]

[4] First Annual Progress Report on the Roll-out of smart meters, DECC December 2012
[5] Second Annual Progress Report on the Roll-out of smart meters, DECC December 2013
[6] Second Annual Progress Report on the Roll-out of smart meters, DECC December 2013

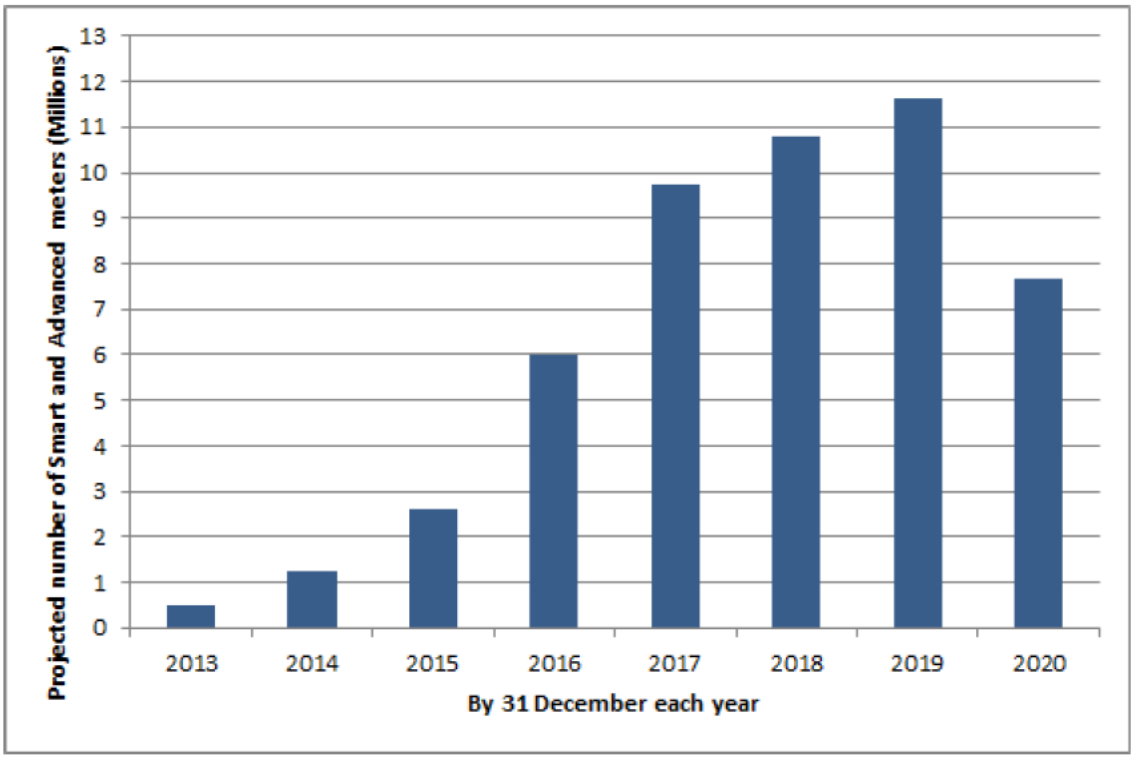

- Electricity Suppliers are free to plan the roll-out of smart meters in a way that suits their business. There is no reason to presume that this approach would map well onto the needs of DNOs

6.1 Ubiquitous Smart Meters

Under this scenario, all points of customer connection have half hourly metering data stored locally and communicated to the data hub. These data include:

- Half hour energy profile data (section 5.5.9.9)
  - Consumption (i.e. Active Energy Imported);
  - Active Energy Exported;
  - Reactive Energy Imported;
  - Reactive Energy Exported.
  - Date and time at the end of the 30 minute period to which the data relates
- Maximum Demand data (sections 5.5.9.10, 5.5.9.11)
  - Maximum Demand Active Power Import Value and the date and time at the end of the 30 minute period to which the data relates
  - Maximum Demand (Configurable Time) Active Power Import Value and the date and time at the end of the 30 minute period to which the data relates
  - Maximum Demand Active Power Export Value and the date and time at the end of the 30 minute period to which the data relates

Although smart meters measure voltage and current in order to calculate energy consumption, the Smart Meter specification does not mandate accuracy for measuring Voltage or Current as it is an energy measurement device. Manufacturers are naturally reluctant to confirm the accuracy for voltage and current measurements, but have verbally suggested that it will be about +/-0.5%. At least one manufacturer has published energy measurement accuracy figures of better than +/-0.5% which infers underlying measurement accuracy of this figure or better.

There remains a need to resolve access to data for customers both with and without smart meters, although it is assumed that DNO will have access to smart meter hh consumption data even if it is aggregated. The main gap is access to data from advanced metering for profile classes 5-8 (non-half-hourly meters with maximum demand registers, broadly equivalent to the 50-100kVA range), which account for about 5% of demand in Northern Powergrid - Yorkshire and nearly 10% in Northern Powergrid - Northeast This information should be available from Suppliers, although this could be subject to agreement with them and their customer. Alternatively it may be that modelling, using information on such customers (perhaps derived from short-term network monitoring) would adequately fill the gap. Further work is required to assess whether this is likely to be the case or not. Further assessment would also be needed to model those domestic customers who choose not to have a smart meter and unmetered supplies.

Provided that an appropriate network model, from Primary Substation down to LV connections, is available together with a tool to perform load flow calculations using that model, i.e. a network planning and design decision support tool (NPADDS), then these data could be used to calculate average real and reactive power flow over each half hour period and the average voltage during each half hour period for all nodes on that network model. Each Maximum Demand data point would replace the half hourly average power data derived from the energy profile data for the half hourly period it represents.

- What would be the cost of calculating and storing these values as business as usual?
    - There are about 10,000,000 nodes in the Northern Powergrid network? Multiply by 17,520 to give the annual data storage requirement
    - Calculate cost of storage assuming 16 bit storage (IEEE 754 standard binary16 provides a resolution of 2^{-10} = 0.0009765625). 230V = 2.3E2, next higher representable value is 2.3009765625E2 giving a voltage precision of better than 0.0004%. Store real power as 0.99999E?<P(kW)<9.99999E?, giving a precision varying between better than 0.0004% and 0.004%, same for reactive power.
    - So storage requirement = no. of stored data nodes x 3 x 17,520 / 512 kB per year.
    - = 10,000,000 x 3 x 17,520 / 512 kB per year = 1,026,562,500 kB or approximately 1Tb per year
    - Storage costs are therefore not material compared to other costs

BS EN 50160:2010 “Voltage characteristics of electricity supplied by public electricity networks” describes an averaging period for voltage measurements of 10 minutes. This same averaging period is also defined in IEC 61000-4-30 “Electromagnetic compatibility (EMC) – Part 4-30:Testing and measurement techniques – Power quality measurement methods”.

The Smart Meter specification requires the Smart Meter to calculate the average value of measured RMS voltage over a configurable period as defined in the Average RMS Voltage Measurement Period. Assuming

that this quantity can be defined by the DNO, then it would seem sensible to set the Average RMS Voltage Measurement Period to 10 minutes.

The author understands that the ENA Smart Meter Steering Group is currently engaged in discussions regarding the appropriate setting for the Average RMS Voltage Measurement Period and that current expectation is for this period to be defined as 30 minutes to align with 30 minute power profile data and to limit the volume of data. The rationale is that the data storage buffers in the smart meters would fill three times more rapidly if 10 minute average data was captured, requiring a more frequent data transfer process for 10 minute voltage data than for is required for 30 minute power profile data. Hence two data collection processes rather than one would be required. Also, as the period is configurable, DNOs could define different periodicity (e.g. 10 minutes), for specific circuits of concern or interest.

The author believes that an opportunity will be lost if the default Average RMS Voltage Measurement Period is set to 30 minutes. The rationale for this view is that the cost of managing changes in Average RMS Voltage Measurement Period and managing data from those specific circuits, is likely to be significantly greater than the cost resulting from an additional standard data transfer process or specifying a more frequent transfer of power profile data than would be required due to the size of Smart Meter data registers. A cost benefit assessment of the alternatives is recommended before the decision is made, as this could be hard to reverse, once a nationally ratified choice has been made.

Other Smart Meter time periods relating to voltage, which can be defined, relate to the time that a condition must continuously exist for that condition to be reported. The threshold for each of these conditions can also be defined. These conditions include:

- RMS Over Voltage
  - The RMS voltage, averaged over a configurable period (initially expected to be 30 minutes), above which an over voltage condition alert is triggered.
- RMS Under Voltage
  - The RMS voltage, averaged over a configurable period (initially expected to be 30 minutes), above which an under voltage condition alert is triggered.
- RMS Extreme Over Voltage
  - The RMS voltage above which an extreme over voltage condition is reported.
- RMS Extreme Under Voltage
  - The RMS voltage below which an extreme under voltage condition is reported.
- RMS Voltage Sag
  - The RMS voltage below which a sag condition is reported.
- RMS Voltage Swell
  - The RMS voltage above which a swell condition is reported.

Industry default values for the time periods and the thresholds for these alerts are in process of being agreed via ENA Smart Meter Steering Group with then DNO ability to alter these values via the DCC in future. The date and time, at which each of these conditions occurred, will be recorded by the Smart

Meter. The DNO will be able to configure the event so that they are just logged in the event log or sent as an alert. The alert comprises a 'flag,' time and date. The voltage value itself isn't part of the alert.

These data could be used as an independent check of the NPADDS outputs, by comparing the output of the average voltage during each half hour period with the voltage excursion data, for the nodes on that network model that correspond to any Smart Meters which have reported voltage excursions. If it is judged that there is value in using the data in this way, then it would be sensible to set alert thresholds at values within statutory limits, in order to enable recognition and remedy of voltage excursions before they occur. A further benefit of setting thresholds within statutory limits is that they would not act as an indicator that a circuit is actually outside of statutory limits, which could otherwise be recognised and used by another party that has access to the data.

Where the outputs of NPADDS and the Smart Meter voltage excursion data agree, further investigation of the network at those times using NPADDS should indicate the reason for the excursion, then remedial actions can be identified and tested using NPADDS.

Where the outputs of NPADDS and the Smart Meter voltage excursion data do not agree, then this indicates that the time resolution of data from smart meters is insufficient to identify the reason for the excursion or that the model / network (phase) connectivity is wrong. In this case further monitoring of the network feeders in question is required. This monitoring requirement corresponds to the requirements for monitoring for the purposes of design identified in section 7.3.1. This would probably include measurement of power quality. e.g. harmonics, unbalance etc.

Smart meters will eventually be fitted to most customer connections, at LV. However, it is possible that some customers may refuse Smart Meters, also there are old mandatory HH and advanced meters which yield HH real and reactive power, and unmetered supplies. It would be helpful to monitor secondary substations early in the roll-out of smart meters, in order to check that the smart meter data is sufficiently accurate and that the processes put in place to use these data are sufficiently robust. This would build confidence in identifying those secondary substation where monitoring is not required and also where and when additional secondary substation monitoring is justified. Also it would be helpful to monitor secondary substations which have feeders with unpredictable unmetered supplies if these supplies form a material proportion of the demand on a feeder.

Monitoring equipment which installed at secondary substations should be of standard specification (i.e. sufficient for Planning purposes, see section7.3.1) unless there is a specific, justified requirement for higher resolution measurements (either time resolution or in the quantities being measured).

Providing that there are HV customers at points on the HV network that the DNO wishes to monitor, then if customer data, similar to that specified for LV Smart Meters, is available to the DNO then these data would be sufficient unless there is a requirement for monitoring for the purposes of design. However, it would be advisable for the DNO to install temporary monitoring equipment at points of interest on the HV network where there is no customer connection in order to verify whether network modelling is sufficiently representative.

It would seem sensible for standard DNO monitoring equipment that is installed at these points to have a similar specification to the Smart Meter Specification, in respect of power and voltage measurement. Indeed, it might be as simple as specifying and procuring standard three-phase smart meters with different

sensing components (e.g. CTs and VTs). It may be advisable to use an alternative communication service, however perhaps the DCC could offer a commercially attractive rate for providing the data to the DNO.

6.1.1 No Smart Meters

Under this scenario, no monitoring data is available from smart meters. It will be necessary for the DNO to install monitors. It should be noted that this situation will not exist in GB when the Smart Meter Rollout is complete. Also, this situation will not exist in some areas of GB shortly after the start of the Rollout.

Monitoring for the purposes of planning can be satisfied by monitoring distribution substations (see section 7.3.1). It is possible to establish a maximum cost for purchase and installation of a distribution substation monitor by assuming that the case for DNO benefits of smart meters is proven.

The ENA Analysis of Smart Meter Benefits[7] identifies two categories of benefit which relate to Proactive Planning of HV & LV Networks. The relative benefit to HV and LV networks was not articulated.

	RIIO ED1 Period DNO Cost Base impacting benefits (in DNO control)		RIIO ED2 Period DNO Cost Base impacting benefits (in DNO control)	
Nature of Benefit	Min (£m)	Max (£m)	Min (£m)	Max (£m)
Better informed load-related investment decisions	11.4	17.6	13.2	27.5
Reduced investment to serve new connections	13	13.8	10.4	31.5
Total	24.4	31.4	23.6	59

In order to calculate the value per secondary substation of the planning benefit, the benefit is divided by the number of secondary substations.

Estimate of value per secondary sub	Total	Northern Powergrid	Comment
Estimated Number of Secondary Substations	1,163,712	58,118	Sum of all power transformers, reactors & regulators (from regulatory reports)
Number of Secondary Substations		59,266	Northern Powergrid asset management data
Max Benefit ED1 (£m)	31.4		
Max Benefit ED1 / secondary Sub (£)	27		
Max Benefit ED2 (£m)	59		

[7] ENA 2013, "Review of Analysis of Network Benefits from Smart Meter Message Flows", Energy Network Association (July 2013)

Max Benefit Total (£m)	90.4
Max Benefit total / secondary Sub (£)	78

It would seem sensible for a Distribution Substation Monitor to have a similar specification to the Smart Meter Specification, in respect of power and voltage measurement. Indeed, the standard specification of one of the variants of Smart Meter may well satisfy the requirement. If not, it could still be more cost effective to purchase and install a special variant of a smart meter than to procure and install a specialist monitoring device. A new 3-phase smart meter costs around £70, but it does not use CTs. An advanced meter using CTs is significantly more expensive. Therefore it is unlikely that widespread deployment of secondary substation monitoring will be cost effective, unless significantly greater (4 times or more) benefits can be identified.

Provided that an appropriate network model, from Primary Substation down to LV connections, is available together with a tool to perform load flow calculations using that model, i.e. a network planning and design decision support tool (NPADDS), then the data from the Distribution Substation Monitors could be used to calculate average power flow over each half hour period and the average voltage during each half hour period for all nodes on that network model. Each Maximum Demand data point would replace the half hourly average power data derived from the energy profile data for the half hourly period it represents.

Voltage excursions, measured by the Distribution Substation Monitors, could be used in the same way as described in the Ubiquitous Smart Meter scenario section above.

Rough cut rules could be defined for identifying networks which require closer investigation in which case the overnight runs of NPADDS would include testing the outputs against these rules. This would identify any network areas which would benefit from more detailed monitoring. This monitoring requirement corresponds to the requirements for monitoring for the purposes of design identified in section 7.3.1. This would possibly include measurement of power quality, e.g. harmonics, unbalance etc.

There is certainly a need for monitoring of secondary substations under these circumstances. If a substation monitor identified that reinforcement of a single underground LV feeder, or a distribution transformer, could be deferred for one year then the net present value of the deferred expenditure would more than pay for the monitor. The monitor would not be permanently installed, therefore the aggregate benefit of the monitor over its lifetime would be many times greater than its cost.

The approach articulated in this section would have the advantage that the practices and procedures for handling smart meter data could be tried and tested before smart meter data is available. Also the benefits from smart meter data could be objectively and explicitly enumerated before smart meters are rolled out.

7. Recommended Monitoring Strategy

The underlying philosophy of this strategy is:

- Endeavour to identify the lowest cost route to acquiring knowledge, which is needed to ensure that a distribution network can fulfil its purpose whilst operating within its physical, regulatory and legal constraints.
- Relatively low time resolution data with high latency for planning purposes can be augmented by higher time resolution data on specific circuits for design purposes. Higher time resolution, low latency data is required for control purposes. For example, the characteristic thermal time constant of overhead line conductors typically used for distribution networks range from approximately 4 minutes (Almond) to 17 minutes (Elm). A control system requires measurements at intervals which are of the order of the characteristic time constant, or less, if it is being used to avoid thermal overload of the conductor.
- Where it is more cost effective, modelling can be used to produce information from monitoring data in preference to installing more monitoring equipment. For example, half hourly demand profiles are sufficient for planning purposes. These demand profiles can be used in a suitable load flow model of the network to calculate voltage profiles. These voltage profiles can be used to identify circuits with potential voltage issues. These circuits can then be studied in more detail, which might require additional monitoring of a broader range of quantities with higher time resolution.

7.1 Data, Information and Knowledge

The CLNR project has looked primarily at voltage and power flow, with a limited analysis of power quality.

Monitoring provides **Data** on network status, at the places and times on the network that measurements have been made. However, this data has no intrinsic value without further processing. What is actually required is **Knowledge** of network status, now and in the future (what is meant by future will be discussed further below).

For power flow, DNOs need to **know** what's about to be overloaded. For voltage, DNOs need to **know** where what is delivered to customers is about to go outside limits. The approach to both is so similar that:

- For design purposes, generally the same load-flow run of the same network model with the same data is used to assess both power flow and voltage sufficiency.
- For control purposes in the CLNR project, using a real-time state estimation & optimisation controller, the same run of the same model with the same data was used to assess both power flow and voltage simultaneously.

Power flow (demand) and Voltage can be measured at various places at various times. This is **Data**.

Modelling activities can provide **Information**:

- Measured values of power flow and voltage can be used in a load flow model of the network to produce time-resolved profiles of power flow (demand profiles) and time-resolved voltage profiles at many points on the network, not just those that have been monitored.

- These calculated demand profiles and voltage profiles can be used to produce generally applicable profiles for given conditions, for example for winter and summer periods, weekday, weekend day etc. This is **Information** (there has been data processing, taken averages, chosen representative periods, etc.)
- The calculated demand profile at various points on the network defines the power that the circuits are, and will be, required to carry at various defined times, hence the required capacity at those points).

We need additional information in order to create the required Knowledge e.g.:

- The Statutory voltage limits for supply of power to customers.
- Capacity of the circuit to carry power.
- Longer-term change in demand (for planning purposes…could be derived from customer data, or network power flow data processed in a different way).
- Possible network topology changes, which might be required to accommodate circuit outages due to maintenance or faults (for control purposes...probably defined from scenario planning).
- etc.

In the UK, engineering recommendations P15, P17 and P27 are generally used to define the capacity of electricity distribution network assets to carry power. In this report we use the term "static ratings" for these quantities. Other aspects of the CLNR project have assessed the suitability of ratings for Overhead Lines, Cables and Transformers and have explored alternative methods to determine actual circuit capacity.

By comparing the demand profiles with the capacity of circuits to carry power, we can **know** what's about to be overloaded. Also by comparing the voltage profile with the statutory voltage limits we can **know** what's about to be overloaded.

These are fundamental principles that apply to Control, Design and Planning of a distribution network. These fundamental principles can also be expanded to include other things that DNOs need to know which are outside of the scope of CLNR, e.g. Fault Level.

There are similarities in the approach which can be used by Control, Design and Planning functions to create knowledge of potential overloads and voltage excursions, albeit that the functions are necessarily interested in the same knowledge over very different timescales.

Depending upon the value of the risk of overload or voltage excursion (i.e. the probability of overload or voltage excursion multiplied by its consequence in terms of regulatory penalties, cost of remediation etc.), the following approaches may be adopted:

- In simple, well understood situations, use deterministic limits and provide policy guidance (this is the default position in many cases today).
- Where the situation is too complex for management using limits, or management using limits would result in an unacceptable cost, then mathematically reduce the problem, describe using simple rules and provide guidance.
- Where the situation is (or is believed to be) too complex for management using rules, or management using rules would result in an unacceptable cost, then use load-flow modelling.

Note that irrespective of which of these approaches is adopted, the underlying philosophy is the same. i.e. Generate information from data. Combine information to produce knowledge. Act on that knowledge.

For example, in BAU today, at LV a network designer might compare a MDI reading with the static rating of an asset in order to know whether the asset is about to be overloaded and hence decide whether reinforcement is required. MDI and static rating might be regarded as data, however they are both information. The static rating is the result of some complex processing of experimental data, which was carried out many years ago and the MDI uses simple processing (recording a maximum value) to produce information from analogue current measurements.

Static ratings are used by network designers to ensure that the network operates at a safe margin within thermal constraints. Therefore there is no requirement for the Control function to manage thermal stress on network components during normal operating conditions. However, it is usual for control engineers to check, before reconfiguring the network, that the proposed reconfiguration won't overload the network, Northern Powergrid are implementing a distribution automation algorithm which automates this process as part of automatic post-fault reconfiguration, mimicking but not replacing that manual process. This is an example of approach b)

The Control function is responsible for managing the thermal stress on network components during unusual operating conditions, for example when reconfiguring the network in response to a fault or planned maintenance. Control is aware of the thermal rating of the main current carrying assets under their control. This is likely to be a static rating, either the nameplate rating or the rating specified by an engineering standard (e.g. P17 / P27). In this context cyclic rating of a cable is considered to be a static rating. It may be necessary to operate assets for a short time above the normal static rating but within the capability of the asset, due to the thermal inertia of the component. In this case the control engineer would use short period (Emergency) rating values for Cables and / or Transformers. This is an example of approach a)

As a further example, in order to create knowledge of what's about to be overloaded and where voltage at the point of delivery to customers is about to go outside limits, a control engineer (with access to the appropriate tools) could either:

I. assess the whole network:
    a. For planning/design, a full contingency analysis would be run for the whole network and the whole set of secured events, using recent monitored data, plus agreed assumptions on load growth.
    b. For checking proposed switching schedules, whether planning outages or restoring supplies after fault, the same contingency analysis is needed, but for a smaller part of the network and weighted more towards measured data.
    c. For real-time control, the whole of that part of the network being controlled would be analysed, but entirely as-is, based on monitored data without any predictive element.

    All of these would require some form of modelling to gauge power flows between monitored points, even if every off-take were monitored.

II. Reduce the problem. A power system problem can be simplified by mathematically reducing the network to a few key nodes (similar ready reckoners can be created for the planning and design process). This relies on the assumption that, if voltages or power flows at those key nodes are within limits, so will the rest. That assumption is informed by up-front on-line modelling, and

subsequently verified by additional off-line monitoring and analysis: however, that off-line work will generally be carried out on a full network model or rely upon expert judgement.

Currently, a design assessment of the EHV network would probably follow a similar approach to a). As the complexity of the HV network approaches that of the EHV network, design assessments will become more common. As the HV network is more complex than the EHV network, the cost of network design assessments will increase considerably unless the approach is simplified, for example using the approach articulated in b).

Clearly, cost is an important factor when deciding what and how to measure or model. It is uneconomic to implement low latency monitoring of everything everywhere.

Note that in this report, a distinction is drawn between **Measuring** (i.e. using a sensor to produce a value that can be read or stored locally) and **Monitoring** (i.e. communicating a measured value at regular intervals to a central location).

Hence:

i. Where you can afford to measure something directly and both a) need to and b) can afford to monitor the measurement value with low latency (immediately?), monitor continuously.
ii. Supplement measurements with outputs from a representative model which takes measurement values as inputs, providing that this is more cost effective and sufficiently accurate.
iii. Where you can afford to measure something directly and either a) don't need to or b) can't afford to monitor the measurement value with low latency (immediately?), set a trigger level(s) and transfer information only when the trigger(s) occur(s);
iv. Where you can't afford to measure everything directly, or model everything all the time, simplify the problem to define some suitable proxy and set a trigger level on that.

7.2 Requirements for Planning, Design and Control

The various organisational functions of distribution network businesses have different purposes and therefore have different reasons for needing to know network state. The requirements are different for Planning and for Control, also the requirements for Design sits between Planning and Control.

Investment planning looks forward typically over regulatory timescales. The purpose of investment planning is to identify network investments which are probably required over the planning timescales for budgetary purposes. System planning is typically part of the annual business planning cycle. It identifies network investments (schemes) which will be undertaken in the next financial year.

Network design identifies specific changes that are required to implement planned schemes or in response to a customer issue (e.g. connection request). Historically, networks have been designed for passive operation rather than active operation. Therefore the Network Design function is responsible for specifying networks which avoid overload and keep voltage within statutory limits at all points of customer supply, including operating under n-1 conditions (for those circuits that are on-supply).

Exceptions to this are the responsibility of Control, including during:

- exceptional fault conditions, beyond the Secured Events of the planning standard
- unusual network configurations due to maintenance

- Operation to restore supplies when Control is aware of conditions that are outside of the assumptions applied when the network was designed (e.g. further load or generation connected).

There are both similarities and differences in the requirements for monitoring for the purposes of planning and design. Investment planning and system planning requires a broad view of differences between forecast requirements and capability of the system.

In contrast Control needs to know network state within operational timescales. In CLNR the state estimator calculated every 10 minutes, so data at 5 minute intervals or less was required. Control therefore requires data with higher time resolution and much lower latency than Planning. Planning, Design and Control are all trying to do the same thing, i.e. avoid breaching voltage or thermal limits. However Planning looks out over longer timescales, at lower resolution than Design or Control. Planning does not need voltage measurements to BS EN 50160, Design may need voltage measurements to BS EN 50160, depending on the issue being addressed. Control needs voltage measurements to at least BS EN 50160, preferably better.

Hence the main difference between planning, design and control knowledge is time resolution, latency and completeness: control obviously needs real-time data all the time, while planning and design need historical data often only for a few key days. Plus of course any difference in actual or perceived value of those activities, which feeds into the allowable cost of obtaining the data.

Design requires a higher resolution view of the network than planning, because the uncertainties in planning are greater. The design view is currently obtained by limited monitoring plus load flow modelling to produce relatively simple generic policies (rule-based approach) which is augmented by specific load flow modelling using design tools where required. Because planning involves greater uncertainty, this is currently only done using policy, except where criticality is high (e.g. EHV networks).

Low time resolution, high latency data, such as that which is useful for planning purposes, can also be useful for control purposes, provided that it is processed and presented to the control system (or control engineer) as helpful information. So, for example, not as the times of voltage alarms over the last 6 months, rather as reduced voltage headroom at certain times of day or week, compared with nominal design values.

7.3 Creating the knowledge

To create this knowledge:

7.3.1 Stage one: off-line analysis

Informing that analysis, we need to understand the capability of at-risk assets. The same philosophy applies here as is articulated in the RTTR section of the OSR:

a) build a better model;
b) populate it with better data;

As observed in section 3, currently DNOs monitor primary substations but do not have extensive monitoring lower in the network. For off-line planning and design, to satisfy the requirements previously outlined, it is recommended that in addition load profiles are measured at key points lower in the

networks. Half-hourly measurements of demand at each distribution substation, together with half-hourly data at HV customer connections are sufficient for planning purposes.

The benefit of the additional monitoring would be that DNOs could undertake required investments more efficiently by avoiding unnecessary spending in terms of the size and location of reinforcements, as well as in terms of the timing for the investment. There is therefore a requirement for a low cost monitoring solution for distribution substations to satisfy planning purposes.

In an ideal world everything would be monitored everywhere at the shortest time resolution required to detect any problematic issue in sufficient detail to understand it and be able to implement a fix for the problem. In reality, cost will prevent the ideal from being achieved. It is inefficient to monitor everything everywhere in infinitesimal detail. e.g. Power Quality is monitored by exception.

Ideally 10 minute averages of voltage would be monitored, in line with BS EN 50160. However, using the financial benefit for network planning from additional network monitoring at LV which is publically recognised by DNOs (ENA Smart Meter Benefits), there is only £78 available to monitor every secondary substation if we use benefits over ED1 and ED2 and £27 if we use the benefits over ED1. It is unlikely that substation monitors of the required specification will be available at these prices, including cost of communication, in the foreseeable future.

DNOs will therefore have to rely on Smart Meter data unless additional financial benefits can be identified. The exception to this would be before smart meter data is available, or where any unpredictable unmetered supplies form a material proportion of the load on a feeder. The Smart Meter specification does not provide for 10 minute average voltage data at 10 minute periodicity, however a 10 minute averaging period can be set for identifying when volts have crossed a pre-set threshold and this data can be made available to the relevant DNO.

Alternatively, or in addition to monitoring secondary substations, Smart Meter data could usefully be used to provide demand data for individual LV circuits. The suitability of Smart Meters for monitoring distribution networks is discussed in section 6.1. These data could in principle be aggregated to produce secondary substation demand profiles. Smart meters are able to provide the time at which volts exceed or fall below set thresholds which can be defined by the DNO. The Smart Meter specification provides for two high voltage thresholds and two low voltage thresholds.

Planning

For system planning purposes, half-hourly demand profiles for secondary substations, together with half-hourly demand profiles for HV customers could be used in a suitable network load flow model, to provide a view of the change of loading and voltage of points on the HV and LV network that are close to design limits. This knowledge could identify circuits which will require design studies and/or additional monitoring and avoid these costs on circuits that, without this better knowledge, would have been studied. Update of the profiles on an annual basis would be sufficient to maintain the quality of the model. More frequent updates would probably not sufficiently improve the accuracy of estimator outputs to justify the cost of increasing frequency of update.

This would require a good quality connectivity and electrical model of the network. Alternatively, the analysis could indicate where the network model requires attention, as was found using NPADDS during the CLNR project.

Investment planning timescale processes could also be improved by using these data to produce suitable information. Medium-term trends in half-hourly load profiles could be combined with scenario data for LCT uptake and other information on planned or potential load growth or decline, load or generation connections etc., to produce probabilities of overload or voltage excursion over investment planning timescales. This would use a similar modelling approach to that employed in Transform but use data and information on real feeders.

A suitable load flow modelling system for this purpose could be the system used for design studies, running at times when it is not being used for design studies (e.g. overnight). In order to be cost effective suitable scripts would need to be written to automate the process.

Half-hourly demand profiles for individual LV customers could, in principle, be used in a network load flow model to provide a view of the change of loading and voltage of individual LV circuits. This would identify those circuits which, due to connection of LCTs, are close to design limits. The use of these data would depend upon data protection issues being satisfactorily resolved.

Alternatively a secondary substation monitor could measure half-hourly demand profiles of each LV feeder.

The same process, if suitably designed, could compare the voltage profile derived from the half-hourly demand profiles with any voltage threshold crossing data from Smart Meters. This analysis would not only identify that an LV feeder required attention, it would also identify if the cause of the threshold crossing was known or whether higher time resolution monitoring of the feeder is required. For example, if the load flow modelling did not predict a voltage threshold crossing at a reported time, then this would indicate a network issue with a shorter than half hour time constant.

Reviewing the outputs for circuits which the automated analysis identifies will require design studies, would indicate those areas where more detailed knowledge is required for design.

Summary of requirements for HV & LV Planning Purposes

Measurement of:

- Half-hourly or better averages of bi-directional / 4 quadrant real and reactive power for each phase of each transformer at primary substations (note that 10 minute or lower time averages are required for Control purposes)
- Half-hourly or better averages of bi-directional / 4 quadrant real and reactive power for each phase of all feeders at primary substations (note that 10 minute or lower time averages are required for Control purposes)
- Half hourly average voltage of busbar at primary substations (note that 10 minute or lower time averages are required for Control purposes)
- Half hourly average bi-directional / 4 quadrant real power of each phase of each feeder at secondary substations
- Half hourly average voltage of LV busbar at secondary substations

It is also useful, but not essential, to have higher time resolution voltage information at the LV busbar and at LV feeder end. 10 minute average data would be ideal. The number of times that voltage at a customer's premises has crossed a defined threshold (set within the statutory voltage limits) within a defined period

could provide sufficient early warning of potential voltage excursions within timescales suitable for planning activities to respond to the potential excursion. The time at which such excursions occurred would also be useful.

LV Customer smart meters will be able to provide half-hourly customer demand data. This could be aggregated to produce demand data for the majority of individual LV circuits. LV Customer smart meters will also be able to provide time data when voltage crosses pre-defined thresholds, which would be useful to determine if the cause of the threshold crossing is known or whether higher time resolution monitoring of the feeder is required. LV Customer smart meters will also be able to provide time of voltage excursion.

Design

A designer will currently typically have available information on load at HV connection points from one or more of the following sources:

- Half hourly meter readings
- Maximum Demand Indicator
- The result of a Debut study (for a connection point to an LV network)
- A connection rating

The designer will allocate load at HV using the maximum demand at each connection point derived from one of these sources. Summing these values over all connection points will yield a result that is much greater than the Scada data. The designer will allocate load across the circuits by scaling back these maximum demand values, giving greater weighting to MDI and Debut results since these are more accurate than a rating value.

This approach would be significantly improved by using measured half hour load profiles for all feeders.

Typically Designers will feel comfortable relying on the output of design tools providing that the network model correctly reflects what is connected to each feeder under study, the customer types are familiar and each type of customer is well represented by the load profile in the model. In this case they are likely to scale loads at HV as described above and use an ADMD approach for LV.

If any of these provisos are incorrect then the outputs from design tools are likely to be inaccurate. In reality this is often the case. For instance the characteristics of any commercial load are not known (e.g. is shop a tanning shop or charity shop?). In this case an assessment may be made as to the materiality of any inaccuracies in the findings of the modelling tools. If the inaccuracies are believed to be sufficiently material then factors of safety may be applied to the design.

As an alternative, or in addition, to applying factors of safety it may well be useful to monitor over a limited period and work from indicators and approximations of the data (e.g. maximum load points) to estimate the load type and what its likely long term characteristics are likely to be.

Therefore in addition to the low cost monitoring solution for distribution substations there is also a requirement for a more detailed specification monitoring system to monitor selected feeders for the purposes of design. It is possible for customer connected equipment to have a negative impact on power quality and phase unbalance therefore monitoring equipment for design purposes can usefully include

power quality, e.g. harmonics, unbalance etc., provided the marginal price uplift to include this capability is sufficiently small.

The CLNR project has identified that on the journey towards more active networks, some circuits would benefit by replacing generic static ratings as defined in Engineering Recommendations P15, P17 and P27 with Bespoke Circuit Ratings (BCR), using the same principles which underpin the static ratings but using circuit specific information including demand profile and local ambient conditions. Of the quantities that could be monitored, the most material quantities were identified by the CLNR project. Monitoring is required over a sufficiently long period to gain confidence in the convolution of load profile (heating effect) and ambient conditions (cooling effect). Some of these quantities require a representative measurement rather than continuous monitoring, which significantly reduces implementation cost when compared with implementing real-time thermal ratings. The recommendations for measurement and monitoring to implement BCR are shown in the table in the summary of monitoring requirements section below.

Summary of monitoring requirements for HV & LV Design Purposes

Measurement of:

- Half-hourly or better averages of bi-directional / 4 quadrant real and reactive power for each phase of each transformer at primary substations (note that 10 minute or lower time averages are required for Control purposes)
- Half-hourly or better averages of bi-directional / 4 quadrant real and reactive power for each phase of all feeders at primary substations (note that 10 minute or lower time averages are required for Control purposes)
- Half hourly average voltage of busbar at primary substations (note that 10 minute or lower time averages are required for Control purposes)
- Half hourly average bi-directional / 4 quadrant real power of each phase of all feeders at secondary substations
- Half hourly average voltage of LV busbar at secondary substations
- 10 minute average bi-directional / 4 quadrant real and reactive power of each phase of feeders of interest at secondary substations
- 10 minute averages of voltage, real and reactive power at key points of each phase of feeders of interest
- It is also useful to measure Total Harmonic Distortion (THD) to indicate the presence or otherwise of actual or potential power quality issues.

The accuracy of Voltage and Current measurements should preferably be 0.5%. 10 minute average measurements should be made to IEC62053 Class 0.5 S. Where power quality issues are known or suspected to be an issue (e.g. customer reporting flicker, significant proportion of feeder power supplied by inverter connected generation) then in addition measurement of:

- Current Harmonic Distortion: Maximum, Minimum & Average over each 10 minute period for all harmonics up to 50th order + value for Total Harmonic Distortion.

- Voltage Harmonic Distortion: Maximum, Minimum & Average over each 10 minute period for all harmonics up to 50th order + value for Total Harmonic Distortion.

G5/4 requires power quality assessment to 50th harmonic. The rationale for measuring to such high harmonics is that equipment manufacturers might use switching frequencies at high harmonics, thereby creating PQ problems for the network that would not be found using instruments that only measure lower harmonics.

In order to implement Bespoke Circuit Ratings:

Asset Type	Measure	Monitor
Overhead Line	Conductor Resistance per unit length @ 20C Temperature coefficient of resistance of conductor Conductor diameter Span Length Conductor Type Design Temperature Time constant of Conductor	Load Profile Wind Speed and direction (not required if using P27 approach) Time period depends on the time constant of the conductor. e.g for Almond t~4 mins, whereas for Elm t~17 mins Accuracy <2%
Cable	Cable Size & Type, installation, Configuration (cable laying formation) Soil Ambient Temperature Soil Thermal Resistivity	Half Hourly Load Profile Accuracy <2%
Transformer	Mass of Transformer, windings and oil Losses at no load and rated load Difference between average oil temperature and hot spot temperature Type of cooling mechanism (e.g.fans)	Half Hourly Load Profile if transformer thermal time constant is one hour or more. Oil Temperature (if WTI not available) WTI - Winding hot spot temperature (Primaries) Ambient temperature

7.3.2 Stage two: go active

Having carried out better off line analysis of what customers want and what the power system can deliver then, if demand is likely to exceed capability, the network must go active (or be reinforced). The CLNR project has identified that, at least in the near term, better information on the capacity of individual circuits (Bespoke Circuit Ratings) and individual active management systems, such as Enhanced Automatic Voltage Control devices, can solve network issues that arise. Co-ordinated active control of multiple active devices can yield benefit, but adds significant additional complexity and expense.

Whether the scope of a control system is to maintain a measured quantity within a defined deadband of a set point (e.g. a local voltage control device) or to maintain a wide area of the network within defined limits, using many devices of different types located a strategic points on the network (e.g. a wide area controller), the control system requires a model of the network. As has been discussed in section 7.1, there are two alternative approaches that can form the basis of the control system.

- State estimation / optimisation model (A detailed load flow model to gauge power flows between monitored points)
- Rule-based model (network simplified by mathematically reducing it to a few key nodes)

In practice, both rule-based and state estimation/optimisation engines require a similar set of data. Both rely on an iterative off-line process to identify key measurement points, although the location of those points can differ between the two schemes.

The key differences for monitoring are that:

a) The state estimator can estimate power flows at a number of pinch points, so long as customer behaviour is predictable, whereas the rule-based system must measure each pinch point

b) The state estimator can take a view of what's flowing down a feeder from indirect, rather than direct measurements. For example, a rule-based system might need power flow along a section of 20kV (or 66kV) ring to be measured directly, which might require additional and potentially expensive monitoring to be installed. Conversely, a state estimator takes a view of what's flowing around the ring from a view of what's being taken on at 400V (or 20kV).

For example a state estimator requires monitoring at potentially both fewer points and easier points than a rule-based system.

Another benefit of a state estimator is internal diagnostics which identify measurement errors, i.e. divergence between monitoring and modelling. Likely sources of error include:

- Errors in the electrical model of the network, which can be fixed by correcting the model;
- Errors in existing monitoring, which can be fixed by replacing or upgrading that monitoring;
- Customers who behave in a manner which is either unpredictable (as was found at two industrial sites in CLNR) or unlike surrounding customers.

This highlights the need for additional monitoring of less predictable customers to improve the accuracy of both a state estimator and a rule-based system.

A state estimator may be run at different periodicity depending on the purpose. For example:

- A TSO may run a state estimator every 5 minutes. A system operator is responsible for system balancing and therefore need to have a good understanding of power flows over relatively short timescales.
- Under quiescent running conditions of a distribution network, it is probably sufficient to run an estimator every 10 minutes, to manage voltages in line with BS EN 50160 parameters, and to produce coherent data for the historian.
- An alternate mechanism to respond to system events (e.g. switch trip) would be required. On a heavily-loaded network, a 5- or 10-minute cycle is too slow to trim generation etc. before

conventional protection would operate and disconnect large numbers of customers. This mechanism might be either:

  - A separate protection system, possibly armed according to the results of the last slow state estimator run; or
  - Running the main control system more quickly. The SGS product, although it's rule-based rather than state estimation/optimisation, cycles in less than a second
- CLNR used 5 minute periods, except when controlling volts and VARs on a large network (Denwick). For this Volt-VAR control required 6 minutes to run 150 scenarios, so state estimates were run every 10 minutes.

Additional measurements should be made at points on the HV network:

- At places where there is voltage control equipment (they will be available locally so it makes sense to communicate them to the state estimator).
- At tees where the feeders have unpredictable loads. If this is not explicitly known by the estimator then the effect will be "smeared" across the network between physical measurement points that the estimator knows.
- All points where significant power is injected into the network. CLNR has shown that we don't need to know every domestic PV installation's export.

The quantities to be measured are Volts and Amps. These would be made available to the control system within the time constraints described above. In addition Real Power, Reactive Power and Direction of power flow can either be calculated by the measuring device and made available to the state estimator along with the directly measured quantities or calculated centrally before passing to the state estimator or calculated by the state estimator as required.

Ideally three phase measurements would be made for an unbalanced network, however the additional expense may not justified. Single phase measurements are acceptable unless the network is not balanced. Normal practice in Northern Powergrid is to install a CT on one phase plus a VT across two phases. This gives inaccurate measurements when there is phase unbalance and the degree of unbalance is not known.

It is important that a control system is not fed with noisy measurement data, as this will result in noisy output from the control system and noise might be amplified. Also, it is important that a control system is not fed with non-topical data. A good control system should recognise this and treat the data with suspicion (as should a good control engineer).

A rolling weighted average of measured values could be calculated by the control system (older values having less weight, for example by applying exponential smoothing), to give something broadly equivalent to a 5- or 10-min average, so that discrepancies of a few seconds, or even tens of seconds, are immaterial. This would both address noise issues and non-topical data issues. Such smoothing might also remove or reduce the need for interpolation.

For control purposes In CLNR, the accuracy of voltage measurements was to IEC62053 Class 0.5 S and the accuracy of current measurements was to IEC62053 Class 0.5S.

For real-time active management, we propose monitoring of:

Voltage measurement accuracy to IEC62053 Class 0.5 S

Voltage measurement accuracy to IEC62053 Class 0.5S

- State estimation & optimisation:
  - For Primary sites (6.6kV, 11kV or 20kV)
    - Voltage, V > 100V step change updated in less than 15 seconds
  - For Secondary sites 400V
    - Voltage, V > 1V step change updated in less than 15 seconds
  - For all sites
    - Amps, I > 5A step change updated in less than 15 seconds
    - Real Power, P > 5kW step change updated in less than 15 seconds
    - Reactive Power Q > 5kVar step change updated in less than 15 seconds
    - Ampacity A > 5A step change updated in less than 15 seconds
  - Changes in measured values at a monitoring point which are lower than these indicated values would not be transferred to the estimator. The estimator would use the most recent previously transferred value in lieu of an updated value.
- Rule-based:
  - Same as for state estimation, except deployment of more monitoring is likely to be required (see examples above)

An advantage of this approach is that it minimises the time required to transfer and process monitoring data, by only transferring those measurements that have changed materially. This minimises system update latency for measurement that are changing fastest. Those measurements that are not changing quickly do not require low latency. This approach will increase the responsiveness and accuracy of the control system.

To achieve the full benefits of this approach would require a change from the control system polling RTUs (i.e. pre-emptive scheduling) to a message driven (interrupt-driven) system architecture. This is in line with most modern computer operating systems.

To get the full benefits of active management, the roll out of real-time thermal ratings (RTTR) on transformers and overhead lines is recommended. From CLNR findings, measurement of the following quantities is recommended. Some of these quantities only require a representative measurement rather than continuous monitoring, which significantly reduces implementation cost of RTTR.

Asset Type	Measure	Monitor
Overhead Line	Conductor Resistance per unit length @ 20C Temperature coefficient of resistance of conductor Conductor diameter Span Length Conductor Type Design Temperature Time constant of Conductor	Current Wind Speed and direction Conductor Temperature Time period depends on the time constant of the conductor. e.g for Almond t~4 mins, whereas for Elm t~17 mins Accuracy <2%

Cable	Cable Size & Type, installation, Configuration (cable laying formation) Soil Ambient Temperature Soil Thermal Resistivity	Half Hourly Load Profile Accuracy <2%
Transformer	Mass of Transformer, windings and oil Losses at no load and rated load Difference between average oil temperature and hot spot temperature Type of cooling mechanism (e.g.fans)	Half Hourly Load Profile if transformer thermal time constant is one hour or more. Oil Temperature (if Winding hot spot not available) WTI - Winding hot spot temperature (Primaries) Ambient temperature

The control room

We also need to recognise the existing system control function. While DNO control engineers do not yet generally despatch generation themselves, they do require visibility of network state:

a) For safety management;
b) To ensure that assets will not be overloaded if proposed switching is executed; and
c) To monitor (generally by exception) the operation of existing real-time automatic voltage control.

This is presently satisfied by a SCADA system which receives RMS measurements of network analogues (e.g. Volts, Amps etc.). Network measurements are not coincident in time. Measurements can be communicated when the measurement device is polled (e.g. Ferranti Mk IIa) or the RTU might report by exception, when some threshold is crossed (e.g. YE-WISP). Measurements are generally received by the control room within 30 seconds of the measurement time.

A good control engineer (or an effective control system) is not only interested in current network state (the job title is not “observation engineer”), but is also interested in network state in the near future. A view of future state is required to assess:

- Whether the network will remain within acceptable operating limits (either normal running limits or post-fault running limits, or during system maintenance),
- What remedial actions could be taken if it is likely to be outside limits,
- What the state of the network would be if these actions were taken,
- Which is the optimum combination of actions, etc.

Even in the absence of active management schemes, contingency analysis (i.e. working out in advance what would happen after switching the network) is becoming more complex as customers do different things.

Currently a control engineer uses knowledge and experience to assess future state. There is likely to be a difference between the preferred actions of different control engineers, because each has different knowledge, experience and beliefs. Tools are available for SCADA such as Contingency Analysis and

Switching Studies but these are not looking at the future network conditions. On occasions system designers will use load flow tools which are commonly used for system design studies to undertake contingency analyses at the request of control engineers. Forecast applications are normally used for generation scheduling, if the network operator can schedule generation.

We believe that monitoring requirements for control room purposes are the same as that required for ANM systems, with the proviso that, if existing SCADA systems constrain data transfer from RTU to sequential transfer at set times (i.e. polled systems) then the RTUs should be specified as described for ANM systems and interfaced to the existing scada system to enable polling to occur. This will ease the upgrade path to a more suitable future scada system.

ANM monitoring

Finally, the operation of the active management scheme itself must be measured:

- On the engineering console. For the state estimation & optimisation engine we've used in CLNR, there is an internal data historian, which holds detailed information on the inner workings of the scheme
- To provide visibility to the control engineer.

  It is recommended to bring key data onto the main SCADA system, to give the control engineer visibility of what the ANM system is doing. This complements the additional visibility of points where significant power is injected into the network (e.g. DG output) proposed earlier in this section. The main data to bring back is the set-points so that, at a glance, the control engineer can see both what a given controller is doing and what it has been instructed to do.

  Where reasonably practicable, information on why the ANM system issued those set-points would also be brought back, recognising that this will often be apparent from existing measurement points.
- To support off-line power system planning/design.

  There may be occasions when the detailed information on the ANM scheme's internal data historian may be useful for planning and design, that information could be made available through a secure extract process managed within the control support function [e.g. extract it, put it into something like excel, and mail it across].

  As previously noted, we'll make the key information available on the main SCADA system. That will then be picked up by the existing services of:

  a) a data historian within the main SCADA system; and

  b) a segregated database, fed securely from the data historian, which can be queried

8. Recommended changes to specified CLNR monitoring

8.1 HV Monitoring

The following table consolidates the information in appendix 4, i.e. the monitoring that was specified at the start of the project.

The last column indicates changes in recommendations resulting from the learning generated by the project.

Parameters	Requirements	Location	Description	OHL RTTR	EAVC	Cable RTTR	Tx RTTR	EES	Purpose	Changes (denotes no change)
Ambient Temperature		EHV Feeder	66kV Overhead Line – Tower						used to assess the available thermal capacity of the individual asset	Not required
Available Capacity (A)		EHV Feeder	66kV Overhead Line – Tower						used to assess the available thermal capacity of the individual asset	Calculated quantity
Conductor Temperature		EHV Feeder	66kV Overhead Line – Tower						used to assess the available thermal capacity of the individual asset	
Current		EHV Feeder	66kV Overhead Line – Tower						used to assess the available thermal capacity of the individual asset	
Insolation Levels		EHV Feeder	66kV Overhead Line – Tower						used to assess the available thermal capacity of the individual asset	Not required
Wind Direction		EHV Feeder	66kV Overhead Line – Tower						used to assess the available thermal capacity of the individual asset	
Wind Speed		EHV Feeder	66kV Overhead Line – Tower						used to assess the available thermal capacity of the individual asset	
Available capacitor stages		HV Feeder	20kV Capacitor Bank control						Input required for GUS control algorithms	

Parameters	Requirements	Location	Description	OHL RTTR	EAVC	Cable RTTR	Tx RTTR	EES	Purpose	Changes (denotes no change)
Feeder Current	Maximum, Minimum & Average over each 1 minute period.	HV Feeder	20kV Capacitor Bank control						Input required for GUS control algorithms	
Phase Angle	Derived from voltage and current measurements	HV Feeder	20kV Capacitor Bank control						Input required for GUS control algorithms	
Voltage	Maximum, Minimum & Average over each 1 minute period.	HV Feeder	20kV Capacitor Bank control						Input required for GUS control algorithms	
Ambient Temperature		HV Feeder	20kV Pole						used to assess the available thermal capacity of the individual asset	Not required
Available Capacity (A)		HV Feeder	20kV Pole						used to assess the available thermal capacity of the individual asset	Calculated quantity
Conductor Temperature		HV Feeder	20kV Pole						used to assess the available thermal capacity of the individual asset	
Current	Maximum, Minimum & Average over each 1 minute period.	HV Feeder	20kV Pole						used to assess the available thermal capacity of the individual asset	
Insolation Levels		HV Feeder	20kV Pole						used to assess the available thermal capacity of the individual asset	Not required
Wind Direction		HV Feeder	20kV Pole						used to assess the available thermal capacity of the individual asset	
Wind Speed		HV Feeder	20kV Pole						used to assess the available thermal capacity of the individual asset	
Current	Maximum, Minimum & Average over each 1 minute period.	HV Feeder	20kV Regulator tap change control						Input required for GUS control algorithms	
Phase Angle	Derived from voltage and current measurements	HV Feeder	20kV Regulator tap change control						Input required for GUS control algorithms	

Parameters	Requirements	Location	Description	OHL RTTR	EAVC	Cable RTTR	Tx RTTR	EES	Purpose	Changes (denotes no change)
Tap Position		HV Feeder	20kV Regulator tap change control						Input required for GUS control algorithms	
Voltage	Maximum, Minimum & Average over each 1 minute period.	HV Feeder	20kV Regulator tap change control						Input required for GUS control algorithms	
Available Capacity (A)		HV Feeder	33kV Cable						used to assess the available thermal capacity of the individual asset	Calculated quantity
Cable Sheath Temperature		HV Feeder	33kV Cable						used to assess the available thermal capacity of the individual asset	Not required
Current	Maximum, Minimum & Average over each 1 minute period.	HV Feeder	33kV Cable						used to assess the available thermal capacity of the individual asset	
Insolation Levels		HV Feeder	33kV Cable						used to assess the available thermal capacity of the individual asset	Not required
Phase Angle	Derived from voltage and current measurements	HV Feeder	33kV Cable						used to assess the available thermal capacity of the individual asset	Not required
Soil Temperature		HV Feeder	33kV Cable						used to assess the available thermal capacity of the individual asset	Can be pre-measured. Does not need to be monitored
Voltage	Maximum, Minimum & Average over each 1 minute period.	HV Feeder	33kV Cable						used to assess the available thermal capacity of the individual asset	Not required
Soil Thermal Resistivity		HV Feeder	6kV cable						used to assess the available thermal capacity of the individual asset Not originally specified	Can be pre-measured. Does not need to be monitored
Available Capacity (A)		HV Feeder	6kV cable						used to assess the available thermal capacity of the individual asset	Calculated quantity

Parameters	Requirements	Location	Description	OHL RTTR	EAVC	Cable RTTR	Tx RTTR	EES	Purpose	Changes (denotes no change)
Cable Sheath Temperature		HV Feeder	6kV cable						used to assess the available thermal capacity of the individual asset	Not required
Current	Maximum, Minimum & Average over each 1 minute period.	HV Feeder	6kV cable						used to assess the available thermal capacity of the individual asset	
Insolation Levels		HV Feeder	6kV cable						used to assess the available thermal capacity of the individual asset	Not required
Phase Angle	Derived from voltage and current measurements	HV Feeder	6kV cable						used to assess the available thermal capacity of the individual asset	Not required
Soil Temperature		HV Feeder	6kV cable						used to assess the available thermal capacity of the individual asset	Can be pre-measured. Does not need to be monitored
Voltage	Maximum, Minimum & Average over each 1 minute period.	HV Feeder	6kV cable						used to assess the available thermal capacity of the individual asset	Not required
Soil Thermal Resistivity		HV Feeder	6kV cable						used to assess the available thermal capacity of the individual asset Not originally specified	Can be pre-measured. Does not need to be monitored
Voltage		HV Feeder - End Point	RTTR circuit						to assess whether, where the additional capacity of a circuit is fully utilised, the effect does not have an adverse effect upon the voltage profile of the network	
Voltage	Maximum, Minimum & Average over each 1 minute period.	HV Feeder End Point	6kV Feeder End						to assess whether, where the additional capacity of a circuit is fully utilised , the effect does not have an adverse effect upon the voltage profile of the network	Only required for PQ issues For planning can use Time that a defined voltage threshold is crossed
Voltage	Maximum, Minimum & Average over each 1 minute period.	HV Feeder End Point	6kV Feeder end						Input required for GUS control algorithms	15 second average

Parameters	Requirements	Location	Description	OHL RTTR	EAVC	Cable RTTR	Tx RTTR	EES	Purpose	Changes (denotes no change)
Ambient Temperature		Primary	33/6kV Transformer						used to assess the available thermal capacity of the individual asset	
Available Capacity (A)		Primary	33/6kV Transformer						used to assess the available thermal capacity of the individual asset	Calculated field
Current	Maximum, Minimum & Average over each 1 minute period.	Primary	33/6kV Transformer						used to assess the available thermal capacity of the individual asset	Half hourly averages
Insolation Levels		Primary	33/6kV Transformer						used to assess the available thermal capacity of the individual asset	Not required
Oil Temperature		Primary	33/6kV Transformer						used to assess the available thermal capacity of the individual asset	Winding Temperature Indicator
Phase Angle	Derived from voltage and current measurements	Primary	33/6kV Transformer						used to assess the available thermal capacity of the individual asset	Not required
Voltage (6kV)	Maximum, Minimum & Average over each 1 minute period.	Primary	33/6kV Transformer						used to assess the available thermal capacity of the individual asset	Not required
Ambient Temperature		Primary	66/20kV Transformer						used to assess the available thermal capacity of the individual asset	
Available Capacity (A)		Primary	66/20kV Transformer						used to assess the available thermal capacity of the individual asset	Calculated field
Current	Maximum, Minimum & Average over each 1 minute period.	Primary	66/20kV Transformer						used to assess the available thermal capacity of the individual asset	Half hourly averages
Insolation Levels		Primary	66/20kV Transformer						used to assess the available thermal capacity of the individual asset	Not required
Oil Temperature		Primary	66/20kV Transformer						used to assess the available thermal capacity of the individual asset	Winding Temperature Indicator
Phase Angle	Derived from voltage and current measurements	Primary	66/20kV Transformer						used to assess the available thermal capacity of the individual asset	Not required

Parameters	Requirements	Location	Description	OHL RTTR	EAVC	Cable RTTR	Tx RTTR	EES	Purpose	Changes (denotes no change)
Voltage (20kV)	Maximum, Minimum & Average over each 1 minute period.	Primary	66/20kV Transformer						used to assess the available thermal capacity of the individual asset	Not required
Ambient Temperature		Primary	66kV Overhead Line – Tower						used to assess the available thermal capacity of the individual asset	Not required
Available Capacity (A)		Primary	66kV Overhead Line – Tower						used to assess the available thermal capacity of the individual asset	Calculated quantity
Conductor Temperature		Primary	66kV Overhead Line – Tower						used to assess the available thermal capacity of the individual asset	
Current	Maximum, Minimum & Average over each 1 minute period.	Primary	66kV Overhead Line – Tower						used to assess the available thermal capacity of the individual asset	
Insolation Levels		Primary	66kV Overhead Line – Tower						used to assess the available thermal capacity of the individual asset	Not required
Wind Direction		Primary	66kV Overhead Line – Tower						used to assess the available thermal capacity of the individual asset	
Wind Speed		Primary	66kV Overhead Line – Tower						used to assess the available thermal capacity of the individual asset	
Current	Maximum, Minimum & Average over each 1 minute period.	Primary	Transformer tap change control						Input required for GUS control algorithms	15 second average
Phase Angle	Derived from voltage and current measurements	Primary	Transformer tap change control						Input required for GUS control algorithms	
Tap Position		Primary	Transformer tap change control						Input required for GUS control algorithms	15 second average

Parameters	Requirements	Location	Description	OHL RTTR	EAVC	Cable RTTR	Tx RTTR	EES	Purpose	Changes (denotes no change)
Voltage	Maximum, Minimum & Average over each 1 minute period.	Primary	Transformer tap change control						To determine whether a change to set point is advisable	15 second average

8.2 LV Monitoring

The following table consolidates the information in appendix 3, i.e. the monitoring that was specified at the start of the project. The last column indicates changes in recommendations resulting from the learning generated by the project.

Parameter	Requirements	Measurement Location	EAVC	LV EES	EV/HP Impact	PV Impact	Purpose?	Changes (denotes no change)
Current Harmonic Distortion	Maximum, Minimum & Average over each 10 minute period for all harmonics up to 50th order + value for Total Harmonic Distortion.	LV Feeder End Point					To determine the harmonic impedance of the network	Only required for PQ issues
Flicker	Pst and Plt measurements	LV Feeder End Point					To determine whether flicker is above p28 limits and /or has it deteriorated or improved	Only required for PQ issues
Voltage	Maximum, Minimum & Average over each 10 minute period.	LV Feeder End Point					To determine whether the variation of source voltage has had any adverse effects at the end of the feeders, particular concern might be around situations where the substation busbar voltage has been lowered.	Only required for design issues For planning can use Time that a defined voltage threshold is crossed

Parameter	Requirements	Measurement Location	EAVC	LV EES	EV/HP Impact	PV Impact	Purpose?	Changes (denotes no change)
Voltage Harmonic Distortion	Maximum, Minimum & Average over each 10 minute period for all harmonics up to 50th order + value for Total Harmonic Distortion.	LV Feeder End Point					To determine whether exceeding planning limits of G5/4 or EMC limits	Only required for PQ issues
Voltage Unbalance	Maximum, Minimum & Average over each 10 minute period.	LV Feeder End Point					To see whether unbalance above the P29 unbalance level limits of 2% which might cause problems with 3 phase motors	Only required for design issues
Current	Maximum, Minimum & Average over each 10 minute period.	LV Feeder Mid Point					Need to know the power cf rating, also needed for current harmonic analysis.	Only required for design issues For planning can use half-hourly averages
Current Harmonic Distortion to 50th	Maximum, Minimum & Average over each 10 minute period for all harmonics up to 50th order + value for Total Harmonic Distortion.	LV Feeder Mid Point					To determine the harmonic impedance of the network	Only required for PQ issues
Flicker	Pst and Plt measurements	LV Feeder Mid Point					to determine whether flicker is above p28 limits and /or has it deteriorated or improved	Only required for PQ issues
Phase Angle	Derived from voltage and current measurements	LV Feeder Mid Point					To understand the power factor of the load.	Calculated value
Power	Derived from voltage and current measurements	LV Feeder Mid Point					To compare with ratings	Calculated value
Voltage	Maximum, Minimum & Average over each 10 minute period.	LV Feeder Mid Point					?	Only required for PQ issues For planning can use Time that a defined voltage threshold is crossed

Parameter	Requirements	Measurement Location	EAVC	LV EES	EV/HP Impact	PV Impact	Purpose?	Changes (denotes no change)
Voltage Harmonic Distortion to 50th order	Maximum, Minimum & Average over each 10 minute period for all harmonics up to 50th order + value for Total Harmonic Distortion.	LV Feeder Mid Point					To determine whether exceeding planning limits of G5/4 or EMC limits	Only required for PQ issues
Voltage Unbalance	Maximum, Minimum & Average over each 10 minute period.	LV Feeder Mid Point					To see whether unbalance above the P29 unbalance level limits of 2% which might cause problems with 3 phase motors	Only required for design issues
Current	Maximum, Minimum & Average over each 10 minute period.	LV Feeder storage connection					Need to know whether changing or discharging and rate, also needed for current harmonic analysis.	Only required for design issues For planning can use half-hourly averages
Current Harmonic Distortion to 50th	Maximum, Minimum & Average over each 10 minute period for all harmonics up to 50th order + value for Total Harmonic Distortion.	LV Feeder storage connection					To determine the harmonic impedence of the network	Only required for PQ issues
Flicker	Pst and Plt measurements	LV Feeder storage connection					To determine if Storage has improved and if so by how much.	Only required for PQ issues
Phase Angle	Derived from voltage and current measurements	LV Feeder storage connection					To determine if export or importing and check if there are power factor problems on the network.	Calculated value
Power	Derived from voltage and current measurements	LV Feeder storage connection					To determine Charge / Discharge rate	Calculated value
Voltage	Maximum, Minimum & Average over each 10 minute period.	LV Feeder storage connection					To determine degree to which storage improves voltage profile along feeder	Only required for design issues For planning can use Time that a defined voltage threshold is crossed

Parameter	Requirements	Measurement Location	EAVC	LV EES	EV/HP Impact	PV Impact	Purpose?	Changes (denotes no change)
Voltage Harmonic Distortion to 50th order	Maximum, Minimum & Average over each 10 minute period for all harmonics up to 50th order + value for Total Harmonic Distortion.	LV Feeder storage connection					To determine whether exceeding planning limits of G5/4 or EMC limits	Only required for PQ issues
Voltage Unbalance	Maximum, Minimum & Average over each 10 minute period.	LV Feeder storage connection					To see whether storage alleviates the unbalance above the P29 unbalance level limits of 2% which might cause problems with 3 phase motors	Only required for design issues
Ambient Temperature	Maximum, Minimum & Average over each 10 minute period.	Substation LV Board					For correlation with Power Measurements (From Voltage & Current Measurements)	Not required
Current	Maximum, Minimum & Average over each 10 minute period.	Substation LV Board					Need to know the power of rating, also needed for current harmonic analysis.	Only required for design issues For planning can use half-hourly averages
Current Harmonic Distortion	Maximum, Minimum & Average over each 10 minute period for all harmonics up to 50th order + value for Total Harmonic Distortion.	Substation LV Board					To determine the harmonic impedance of the network	Only required for PQ issues
Flicker	Pst and Plt measurements	Substation LV Board					to determine whether flicker is above p28 limits and /or has it deteriorated or improved	Only required for PQ issues
Insolation Levels	Maximum, Minimum & Average over each 10 minute period.	Substation LV Board					To correlate with power measurements (from Voltage & Current measurements)	Not required
Phase Angle	Derived from voltage and current measurements	Substation LV Board					To understand the power factor of the load.	Calculated value
Power	Derived from voltage and current measurements	Substation LV Board					To compare with ratings	Calculated value

Parameter	Requirements	Measurement Location	EAVC	LV EES	EV/HP Impact	PV Impact	Purpose?	Changes (denotes no change)
Voltage	Maximum, Minimum & Average over each 10 minute period.	Substation LV Board					Monitor Source Conditions to check if within statutory limits, also to see if power is importing or exporting by checking volts against volts of upstream supply. Also to establish baseline for comparison of feeder end point conditions.	Only required for design issues For planning can use Time that a defined voltage threshold is crossed
Voltage Harmonic Distortion	Maximum, Minimum & Average over each 10 minute period for all harmonics up to 50th order + value for Total Harmonic Distortion.	Substation LV Board					To determine whether exceeding planning limits of G5/4 or EMC limits	Only required for PQ issues
Voltage Unbalance	Maximum, Minimum & Average over each 10 minute period.	Substation LV Board					To see whether unbalance above the P29 unbalance level limits of 2% which might cause problems with 3 phase motors	Only required for design issues
Current	Maximum, Minimum & Average over each 10 minute period.	Substation LV Board: At the point of connection of the transformer to the LV board.					To calculate the power, also needed for current harmonic analysis.	Only required for design issues For planning can use half-hourly averages
Phase Angle	Derived from voltage and current measurements	Substation LV Board: At the point of connection of the transformer to the LV board.					To determine if exporting or importing and check if there are power factor problems on the network.	Calculated value
Power	Derived from voltage and current measurements	Substation LV Board: At the point of connection of the transformer to the LV board.					To compare with ratings	Calculated value

Parameter	Requirements	Measurement Location	EAVC	LV EES	EV/HP Impact	PV Impact	Purpose?	Changes (denotes no change)
Voltage	Maximum, Minimum & Average over each 10 minute period.	Substation LV Board: At the point of connection of the transformer to the LV board.					Monitor Source Conditions to check if within statutory limits, also to see if power is importing or exporting by checking volts against volts of upstream supply. Also to establish baseline for comparison of feeder end point conditions.	Only required for design issues For planning can use Time that a defined voltage threshold is crossed

8.3 Time stamping

Time stamping of each measurement period should be made at the beginning of the minute associated with the measurement. To avoid drift of the time-stamping of measurements at separate measurement locations over the extended periods of this trial the real time clock should be reset to a known standard at least once a week in line with the requirements described in report number 78380.

For electrical parameters the basic data should be formed from 10 cycle time intervals. For each time period shall be formed from aggregate of the 10 cycle time intervals within the period. Each period shall begin at the stroke of the minute. Re-synching of the time period and groups of 10 cycles should be undertaken at each 1 minute period. This approach is consistent with IEC 61000-4-30 Class S instruments.

8.4 Smart Meter monitoring of LV Feeders

Relevant extracts of the Smart Meter specification (REF) can be found in appendix 2.

Smart meters will have the capability to record and make available to DNOs sufficient data to know whether the voltage at the connection point has been outside statutory limits (or some other limit chosen by the meter operator, presumably with reference to the relevant DNO) and when this excursion has occurred.

Smart meters will have the capability to record and make available to DNOs half hourly power consumption / export values and where the appropriate meter has been fitted, power consumption and power production values.

This information will be recorded on a half-hourly basis and communicated on request to DNOs on timescales that the author currently believes will not be compatible with operation and control of the network, but which would be useful for design and planning purposes.

9. Conclusions

Using the learning from the project, a recommended cost-effective BAU monitoring strategy has been produced, which would provide data for the purposes of planning, design and control in a cost effective manner. Data of lower resolution and higher latency, suitable for planning purposes, when suitably augmented by higher resolution, lower latency data, can be re-used for network design and control, reducing the overall cost of providing a full data set for network purposes. Draft data specifications for monitoring equipment for these purposes have been produced.

10. Acknowledgements

I wish to thank Dave Miller for many discussions on control, design and planning of distribution networks and in particular the operation of the state estimation system trialled in the CLNR project, also for his insight more generally. I could not have produced this report and written it in a way that hopefully makes sense to distribution network control engineers, designers and planners without his help.

I also wish to thank Ian Lloyd for articulating clearly what was actually monitored in the project also where and how data was acquired and communicated (the project used a lot of disparate systems in many locations), and Andrew Bower for explaining the finer details of Power Quality measurement and various IEC specifications, also for walking me through the original monitoring specifications for the project.

Finally, I wish to thank all of those that have been involved in the planning, specification, installation, commissioning and operation of the monitoring systems of the CLNR project, without whom it would have been impossible to generate learning on monitoring from the project.

Appendix I LCNF projects that have included network monitoring

Project	Funding Source	Lead DNO	Value (£k)	Start	Finish	Duration (months)	Description
Demonstrating the benefits of monitoring LV network with embedded PV panels and EV charging points	Tier 1	SSEPD	320	Sep-10	Oct-11	14	This project aims to demonstrate the installation of cost-effective 11kV LV substation monitoring devices with zero / low CML losses. The technology and methodology of installation is expected to be applicable to most GB DNO secondary substations. The insight gained from this project on LV network performance, with or without PV and EV charging connection, is expected to lead to improved usage of the distribution system, facilitating the connection of PV and EVs and bringing benefits for the planning of future low carbon network.
LV Current Sensor Technology Evaluation	Tier 1	UKPN	500	Dec-11	Jun-13	19	Project aims to evaluate a range of LV monitoring solutions under laboratory conditions at the National Physical Laboratory and in the field on DNO low voltage networks, equipping at total of 28 substations with sensors from 7 different manufacturers
LV Network Templates	Tier 2	WPD	9,017	Apr-11	Jul-13	28	The Project resulted in the installation of over 800 substations monitors and 3600 voltage monitors together with associated communication and data handling infrastructure. The University of Bath undertook the statistical analysis of over 500,000,000 measurements, leading to a wide range of valuable findings that have been shared with industrial, academic and regulatory stakeholders throughout the project.
Network Management on the Isles of Scilly	Tier 1	WPD	1,287	Aug-12	Aug-13	13	Under the project, all the substations on the Isles of Scilly were fitted with low voltage monitoring to determine the aggregate load across all phases. This has allowed the distribution of load across the network to be more accurately assessed and will aid in informing future network investment. The implemented system was a bespoke

Project	Funding Source	Lead DNO	Value (£k)	Start	Finish	Duration (months)	Description
							design due to limited available off-the-shelf systems when the project was initially scoped.
Ashton Hayes Smart Village	Tier 1	SPEN	200	Jan-12	Oct-13	22	Technical innovation and delivery of information to the community aimed at achieving a sustained reduction in carbon emissions. Achieved by: Installation of micro generation and EV charging, customer engagement, increasing granularity of metering at the secondary substation and renewable generator(s), introduction of DSM
"Smart Hooky": Hook Norton Low Carbon Community Smart Grid	Tier 1	WPD	344	Feb-12	Oct-13	21	The project aims to develop a range of tools and techniques that can be used to support the low carbon transition within rural communities. This is achieved by customer engagement, DSR, PLC communications, HV/LV asset monitoring
Low Voltage Network Solutions	Tier 1	ENWL	490	Apr-11	Mar-14	36	The Project will develop understanding of the current operating characteristics of low voltage networks and of tools to predict how these networks will cope with future user requirements. This project will deploy a range of distributed measurement, sensing and analogue recording instrumentation, which will provide Electricity North West Ltd with greater understanding of the existing operating characteristics and demands of its LV networks and the tools to manage these issues.
Low Carbon London	Tier 2	UKPN	36,060	Jan-11	Dec-14	48	5000 smart meters, with half hourly metering providing inputs to an active network management system. Novel tariffs and demand management for customers will form the commercial aspect of the project.

Project	Funding Source	Lead DNO	Value (£k)	Start	Finish	Duration (months)	Description
Customer-led Network Revolution	Tier 2	NPg	52,620	Jan-11	Dec-14	48	The project is assessing the potential of novel smart grid network technologies, new commercial arrangements and customer flexibility solutions to find cost-effective ways to manage UK electricity networks
Active Network Management with Hydro Generation	Tier 1	SPEN	200	Mar-12	Dec-14	34	North Wales is an area of significant renewable energy resource, including on-shore and off-shore wind as well as hydro generation. It is proposed that an ANM scheme be deployed on this network to actively manage the output of an existing hydro generator in order for it to utilise the additional generation export capability that is present during periods of higher demand. The ANM scheme will use voltage measurements to calculate in real time if the network has extra generation capacity available. This information will then be used to co-ordinate the output of the generator and other controllable devices.
Flexible Networks for a Low Carbon Future	Tier 2	SPEN	6,362	Jan-12	Dec-14	36	Implement enhanced network monitoring and analysis, with flexible network control and dynamic ratings of network plant and equipment to increase network capacity
Flexible Plug & Play	Tier 2	UKPN	9,700	Jan-12	Dec-14	36	The aim of Flexible Plug and Play is to provide a cheaper and faster distributed generation connections to the electricity distribution network. Flexible Plug and Play will look at connecting customers without incurring in expensive reinforcement while proposing to connect them to Active Network Management (ANM)

Project	Funding Source	Lead DNO	Value (£k)	Start	Finish	Duration (months)	Description
Fault Current Active Management	Tier 1	ENWL	854	Sep-13	Mar-15	19	Generators will provide an additional in-feed to the network under fault conditions which leads to much larger fault currents than previously seen. This results in more areas of the network running close or possibly beyond the designed fault current levels. Electricity North West Limited propose to investigate new techniques including innovative use of existing protection to control fault level. Electricity North West Limited propose to carry out an independent Risk Assessment into the different currently available methods of fault current management. Through modelling and measurement Electricity North West Limited aims to compile a picture of how the fault currents vary both across the network and over time.
Low Voltage Integrated Automation	Tier 1	ENWL	600	Mar-13	Mar-15	25	This project will develop and then trial a new integrated solution and novel application of automated voltage control of low voltage (LV) distribution networks. The project will integrate existing and new distribution system equipment such as LV substation monitoring, including at the mid and end points of LV feeders, on-load tap change distribution transformers and distribution substation controllers to provide for co-ordinated automatic voltage control of LV networks
Low Voltage Protection and Communications	Tier 1	ENWL	749	Sep-13	Mar-15	19	Kelvatek have collaborated with Electricity North West Limited on previous IFI projects to develop a range of low voltage monitoring and automation equipment to meet the requirements of future secondary networks. This equipment includes a retrofit device with switching, monitoring and basic protection capabilities which will fit into existing low voltage fuse pillar assets. The project will deliver a new set of protection functions which will allow greater protection of the future low voltage networks, the method to calculate the settings to be applied to the different network configurations and a communications system to allow these to be altered remotely.

Project	Funding Source	Lead DNO	Value (£k)	Start	Finish	Duration (months)	Description
Smart Urban Low Voltage Network	Tier 1	UKPN	2,141	Jul-12	Mar-15	33	This project will demonstrate the business benefits of a large scale roll out of a technology that facilitates remote smart management of the LV network. The technology is a new solid-state switching technology for use on the LV distribution networks
FALCON	Tier 2	WPD	14,463	Nov-11	Sep-15	47	FALCON will trial a range of innovative solutions, including commercial agreements with industrial and commercial customers who agree to control of appreciable amounts of load in relatively short periods of time. The trials will identify market and commercial barriers to DNOs use of DSR and test the market for third party service providers. In particular the project is demonstrating options to address location specific constraint management. Outputs include bespoke contracts, back office systems and best practice guidelines.
My Electric Avenue (I^2EV)	Tier 2	SSEPD	9,083	Jan-13	Dec-15	36	My Electric Avenue will aim to simulate a 2030 electricity network in order to provide essential learning about managing the strain on the electricity distribution network from the anticipated increased uptake of electric vehicles
Distribution Network Visibility	Tier 1	UKPN	2,890	Jan-12	Dec-15	48	The main objective of the project will be to demonstrate the business benefits of the smart collection, utilisation and visualisation of existing data. The project will establish optimum levels of distribution network monitoring and frequency of sampling for specific scenarios and applications. It will also trial various optical sensors that could potentially be used to provide detailed monitoring of sites with no RTUs.
Flexible Urban Network – Low Voltage	Tier 2	UKPN	8,867	Jan-14	Dec-16	36	Implementing a Meshed Network: Power electronics devices will be used for the first time, in combination with remote configuration and informational tools, to access latent/spare capacity that already

Project	Funding Source	Lead DNO	Value (£k)	Start	Finish	Duration (months)	Description
							exists, in shorter timescales than conventional reinforcement. This solution allows a faster response to LV demand changes and higher utilisation of existing assets
New Thames Valley Vision	Tier 2	SSEPD	27,230	Jan-12	Mar-17	63	This project is a complete solution that will allow us to anticipate, understand and support behaviour change in individuals, small businesses and larger companies to help us manage our networks more effectively as GB moves towards a low carbon economy. Utilising: new network planning tools, automated DSR, LV static voltage control, energy storage and a range of communications technologies
Smart Street (eta)	Tier 2	ENWL	11,476	Jan-14	Dec-17	48	Application of voltage control on EHV, HV, LV networks, control of interconnections on radial HV and LV circuits, real time configuration of these techniques to manage capacity and increase efficiency

Appendix II Extracts from Smart Meter Specification

Second version published: July 2012

5.5.9.4 Consumption data

ESME shall be capable of recording to:

i. The Cumulative and Historical Value Store(5.7.5.12) in kWh:

a. Consumption on the Day up to the Local Time;

b. Consumption on each of the eight Days prior to such Day;

c. Consumption in the Week in which the calculation is performed;

d. Consumption in each of the five Weeks prior to such Week;

e. Consumption in the month in which the calculation is performed; and

f. Consumption in the thirteen months prior to such month.

ii. The Daily Consumption Log(5.7.5.14) in kWh, the Consumption on each of the 731 Days prior to the current Day.

5.5.9.8 Daily Consumption data

ESME shall be capable of calculating and storing Consumption for the previous Day together with a UTC date stamp in the Daily Consumption Log(5.7.5.14) every Day at midnight UTC.

5.5.9.9 Half hour profile data

ESME shall be capable of recording in each 30 minute period (commencing at the start of minutes 00 and 30 in each hour), the following information (including the UTC date and time at the end of the 30 minute period to which the data relates) in the Profile Data Log(5.7.5.27):

i. Consumption;

ii. Active Energy Exported;

iii. Reactive Energy Imported; and

iv. Reactive Energy Exported.

5.5.9.10 Maximum Demand Import data

ESME shall be capable of calculating the average value of Active Power Import (5.7.5.4) over each 30 minute period (commencing at the start of minutes 00 and 30 in each hour) and recording:

i. to the Maximum Demand Active Power Import Value (5.7.5.19), the maximum value so calculated since the Maximum Demand Active Power Import Value(5.7.5.19) was last reset (as set-out in section 5.6.3.26) including the UTC Smart Metering date and time at the end of the 30 minute period to which the data relates;

and

ii. to the Maximum Demand (Configurable Time) Active Power Import Value(5.7.5.20), the maximum value so calculated in any 30 minute period (commencing at the start of minutes 00 and 30 in each hour) within the time period specified in Maximum Demand Configurable Time Period(5.7.4.27) (including the UTC date and time at the end of the 30 minute period to which the data relates) since the Maximum Demand (Configurable Time) Active Power Import Value(5.7.5.20) was last reset (as set-out in section 5.6.3.28).

5.5.9.11 Maximum Demand Export data

ESME shall be capable of calculating the average value of Active Power Export over each 30 minute period (commencing at the start of minutes 00 and 30 in each hour) and recording to the Maximum Demand Active Power Export Value(5.7.5.21) the maximum value so calculated since the Maximum Demand Active Power Export Value(5.7.5.21) was last reset (as set-out in section 5.6.3.27) including the UTC date and time at the end of the 30 minute period to which the data relates.

5.5.9.12 Power Threshold Status

ESME shall be capable of comparing the Active Power Import (5.7.5.4) against thresholds and:

i. if the Active Power Import (5.7.5.4) is equal to or lower than the Low Medium Power Threshold (5.7.4.25), setting Power Threshold Status (5.7.5.24) to low;

ii. if the Active Power Import (5.7.5.4) is higher than the Low Medium Power Threshold (5.7.4.25) and equal to or lower than the Medium High Power Threshold (5.7.4.30), setting Power Threshold Status (5.7.5.24) to medium; and

iii. otherwise, setting the Power Threshold Status (5.7.5.24) to high.

5.5.9.13 Reactive Energy Imported

ESME shall be capable of recording cumulative Reactive Energy Imported in the Reactive Import Register (5.7.5.30).

5.5.9.14 Reactive Energy Exported

ESME shall be capable of recording cumulative Reactive Energy Exported in the Reactive Export Register (5.7.5.29).

5.5.12 Voltage Quality Measurements

5.5.12.1 Average RMS voltage

ESME shall be capable of calculating the average value of RMS voltage over a Configurable period as defined in the Average RMS Voltage Measurement Period (5.7.4.6) and: Smart Metering Implementation Programme Draft Page 51 of 126

i. recording the value calculated (including the UTC date and time at the end of the period to which the value relates) in the Average RMS Voltage Profile Data Log (5.7.5.9);

ii. detecting when the value calculated is above the Average RMS over Voltage Threshold (5.7.4.4), and on detection:

a. counting the number of such occurrences in the Average RMS Over Voltage Counter (5.7.5.7);

b. where the value calculated in the prior configurable period was below the Average RMS over Voltage Threshold (5.7.4.4):

i. generating an entry to that effect in the Power Event Log (5.7.5.25); and

ii. generating and sending an Alert to that effect via its HAN Interface.

iii. detecting when the value calculated is below the Average RMS over Voltage Threshold (5.7.4.4), and where the value calculated in the prior configurable period was above the Average RMS Over Voltage Threshold (5.7.4.4):

a. generating an entry to that effect in the Power Event Log (5.7.5.25); and

b. generating and sending an Alert to that effect via its HAN Interface.

iv. detecting when the value calculated is below the Average RMS Under Voltage Threshold(5.7.4.5), and on detection:

a. counting the number of such occurrences in the Average RMS Under Voltage Counter(5.7.5.8);

b. where the value calculated in the prior configurable period was above the Average RMS Under Voltage Threshold (5.7.4.5):

i. generating an entry to that effect in the Power Event Log (5.7.5.25); and

ii. generating and sending an Alert to that effect via its HAN Interface

v. detecting when the value is above the Average RMS Under Voltage Threshold (5.7.4.5), and where the value calculated in the prior configurable period was below the Average RMS Under Voltage Threshold (5.7.4.5):

a. generating an entry to that effect in the Power Event Log (5.7.5.25); and

b. generating and sending an Alert to that effect via its HAN Interface

5.5.12.2 RMS extreme over voltage detection

ESME shall be capable of:

i. detecting when the RMS voltage rises above the RMS Extreme Over Voltage Threshold (5.7.4.36) for a continuous period longer than the RMS Extreme Over Voltage Measurement Period (5.7.4.35) and on detection:

a. generating an entry to that effect in the Power Event Log (5.7.5.25); and

b. generating and sending an Alert to that effect via its HAN Interface; and

ii. detecting when the RMS voltage returns below the RMS Extreme Over Voltage Threshold (5.7.4.36) for a continuous period longer than the RMS Extreme Over Voltage Measurement Period (5.7.4.35) and on detection:

a. generating an entry to that effect in the Power Event Log (5.7.5.25); and

b. generating and sending an Alert to that effect via its HAN Interface;

5.5.12.3 RMS extreme under voltage detection

ESME shall be capable of: Smart Metering Implementation Programme Draft Page 52 of 126

i. detecting when the RMS voltage falls below the RMS Extreme Under Voltage Threshold (5.7.4.38) for a continuous period longer than the RMS Extreme Under Voltage Measurement Period (5.7.4.37) and on detection:

a. generating an entry to that effect in the Power Event Log (5.7.5.25);

b. generating and sending an Alert to that effect via its HAN Interface;

ii. detecting when the RMS voltage rises back above the RMS Extreme Under

Voltage Threshold (5.7.4.38) for a continuous period longer than the RMS Extreme Under Voltage Measurement Period (5.7.4.37) and on detection:

c. generating an entry to that effect in the Power Event Log (5.7.5.25);

d. generating and sending an Alert to that effect via its HAN Interface;

5.5.12.4 RMS voltage sag detection

ESME shall be capable of:

i. detecting when the RMS voltage falls below the RMS Voltage Sag Threshold (5.7.4.41) for a continuous period longer than the RMS Voltage Sag Measurement Period (5.7.4.39) and on detection:

a. generating an entry to that effect in the Power Event Log (5.7.5.25); and

b. generating and sending an Alert to that effect via its HAN Interface;

ii. detecting when the RMS voltage returns above the RMS Voltage Sag

Threshold (5.7.4.41) for longer than the RMS Voltage Sag Measurement Period (5.7.4.39) and on detection:

c. generating an entry to that effect in the Power Event Log (5.7.5.25); and

d. generating and sending an Alert to that effect via its HAN Interface.

5.5.12.5 RMS voltage swell detection

ESME shall be capable of:

i. detecting when the RMS voltage rises above the RMS Voltage Swell

Threshold (5.7.4.42) for a continuous period longer than the RMS Voltage Swell Measurement Period (5.7.4.40) and on detection:

a. generating an entry to that effect in the Power Event Log (5.7.5.25);

and

b. generating and sending an Alert to that effect via its HAN Interface;

ii. detecting when the RMS voltage returns below the RMS Voltage Swell Threshold (5.7.4.42) for a continuous period longer than the RMS Voltage Swell Measurement Period (5.7.4.40) and on detection:

c. generating an entry to that effect in the Power Event Log (5.7.5.25);

and

d. generating and sending an Alert to that effect via its HAN Interface.

5.5.12.6 Supply outage reporting

ESME shall be capable of recording the UTC date and time at which the Supply is interrupted and the UTC date and time when the Supply is restored and:

i. generating entries to that effect in the Power Event Log (5.7.5.25);

ii. following restoration of the Supply, generating and sending an Alert to that effect via its HAN Interface containing details of the UTC dates and times of interruption and restoration; and

iii. following restoration of the Supply, when the time difference between the supply being interrupted and restored is greater than or equal to three minutes, generating and sending an Alert to that effect via its HAN Interface containing details of the UTC dates and times of interruption and restoration.

5.7.5.27 Profile Data Log [INFO]

A log capable of storing UTC date and time-stamped half hourly data (the amount of energy Imported or Exported in a half hour period) arranged as a circular buffer such that when full, further writes shall cause the oldest entry to be overwritten. The log shall be capable of storing:

i. 13 months of Consumption;

ii. 3 months of Active Energy Exported;

iii. 3 months of Reactive Energy Imported; and

iv. 3 months of Reactive Energy Exported.

5.7.4.4 Average RMS Over Voltage Threshold

The average RMS voltage above which an over voltage condition is reported. The threshold shall be configurable within the specified operating range of ESME.

5.7.4.5 Average RMS Under Voltage Threshold

The average RMS voltage below which an under voltage condition is reported. The threshold shall be configurable within the specified operating range of ESME.

5.7.4.6 Average RMS Voltage Measurement Period

The length of time in seconds over which the RMS voltage is averaged.

5.7.4.35 RMS Extreme Over Voltage Measurement Period

The duration in seconds used to measure an extreme over voltage condition.

5.7.4.36 RMS Extreme Over Voltage Threshold

The RMS voltage above which an extreme over voltage condition is reported. The threshold shall be configurable within the specified operating range of ESME.

5.7.4.37 RMS Extreme Under Voltage Measurement Period

The duration in seconds used to measure an extreme under voltage condition.

5.7.4.38 RMS Extreme Under Voltage Threshold

The RMS voltage below which an extreme under voltage condition is reported. The threshold shall be configurable within the specified operating range of ESME.

5.7.4.39 RMS Voltage Sag Measurement Period

The duration in seconds used to measure a voltage sag condition.

5.7.4.40 RMS Voltage Swell Measurement Period

The duration in seconds used to measure a voltage swell condition.

5.7.4.41 RMS Voltage Sag Threshold

The RMS voltage below which a sag condition is reported. The threshold shall be configurable within the specified operating range of ESME.

5.7.4.42 RMS Voltage Swell Threshold

The RMS voltage above which a swell condition is reported. The threshold shall be configurable within the specified operating range of ESME.

5.7.5.7 Average RMS Over Voltage Counter

The number of times the average RMS voltage, as calculated in section 5.5.12.1, has been above the Average RMS Over Voltage Threshold (5.7.4.4) since last reset.

5.7.5.19 Maximum Demand Active Power Import Value

A store capable of holding the largest average value of Active Power Import (5.7.5.4) recorded in any 30 minute period (commencing at the start of minutes 00 and 30 in each hour and including the UTC date and time at the end of the 30 minute period to which the data relates) since the value was last reset (as set-out in section 5.6.3.26), together with the UTC date and time when the value was last reset, arranged such that the recording of a larger value shall cause the previous entry to be overwritten.

5.7.5.20 Maximum Demand (Configurable Time) Active Power Import Value

A store capable of holding the largest average value of Active Power Import (5.7.5.4) recorded in any 30 minute period (commencing at the start of minutes 00 and 30 in each hour) within the time period specified in Maximum Demand Configurable Time Period (5.7.4.27) (including the UTC date and time at the end of the 30 minute period to which the data relates) since the value was last reset (as set-out in section 5.6.3.28), together with the UTC date and time when the value was last reset, arranged such that the recording of a larger value shall cause the previous entry to be overwritten.

5.7.5.21 Maximum Demand Active Power Export Value

A store capable of holding the largest average value of the Active Power Export recorded in any 30 minute period (commencing at the start of minutes 00 and 30 in each hour and including the UTC date and time at the end of the 30 minute period to which the data relates) since the value was last reset (as set-out in section 5.6.3.27), together with the UTC date and time when the value was last

reset, arranged such that the recording of a larger value shall cause the previous entry to be overwritten.

Appendix III CLNR LV Monitoring

The table below shows the initially specified requirements for monitoring for EAVC, EES, PV impact, EV / HP impact on the network.

Parameter	Requirements	Measurement Location	EAVC	LV EES	EV/HP Impact	PV Impact	Purpose?
Current Harmonic Distortion	Maximum, Minimum & Average over each 10 minute period for all harmonics up to 50th order + value for Total Harmonic Distortion.	LV Feeder End Point	⍰				To determine the harmonic impedance of the network
Flicker	Pst and Plt measurements	LV Feeder End Point	⍰	⍰	⍰	⍰	To determine whether flicker is above p28 limits and /or has it deteriorated or improved
Voltage	Maximum, Minimum & Average over each 10 minute period.	LV Feeder End Point	⍰	⍰	⍰	⍰	To determine whether the variation of source voltage has had any adverse effects at the end of the feeders, particular concern might be around situations where the substation busbar voltage has been lowered.
Voltage Harmonic Distortion	Maximum, Minimum & Average over each 10 minute period for all harmonics up to 50th order + value for Total Harmonic Distortion.	LV Feeder End Point	⍰	⍰	⍰	⍰	To determine whether exceeding planning limits of G5/4 or EMC limits
Voltage Unbalance	Maximum, Minimum & Average over each 10 minute period.	LV Feeder End Point	⍰	⍰	⍰	⍰	To see whether unbalance above the P29 unbalance level limits of 2% which might cause problems with 3 phase motors
Current	Maximum, Minimum & Average over each 10 minute period.	LV Feeder Mid Point			⍰	⍰	Need to know the power of rating, also needed for current harmonic analysis.

Parameter	Requirements	Measurement Location	EAVC	LV EES	EV/HP Impact	PV Impact	Purpose?
Current Harmonic Distortion to 50th	Maximum, Minimum & Average over each 10 minute period for all harmonics up to 50th order + value for Total Harmonic Distortion.	LV Feeder Mid Point			?	?	To determine the harmonic impedence of the network
Flicker	Pst and Plt measurements	LV Feeder Mid Point			?	?	to determine whether flicker is above p28 limits and /or has it deteriorated or improved
Phase Angle	Derived from voltage and current measurements	LV Feeder Mid Point			?	?	To understand the power factor of the load.
Power	Derived from voltage and current measurements	LV Feeder Mid Point			?	?	To compare with ratings
Voltage	Maximum, Minimum & Average over each 10 minute period.	LV Feeder Mid Point			?	?	?
Voltage Harmonic Distortion to 50th order	Maximum, Minimum & Average over each 10 minute period for all harmonics up to 50th order + value for Total Harmonic Distortion.	LV Feeder Mid Point			?	?	To determine whether exceeding planning limits of G5/4 or EMC limits
Voltage Unbalance	Maximum, Minimum & Average over each 10 minute period.	LV Feeder Mid Point			?	?	To see whether unbalance above the P29 unbalance level limits of 2% which might cause problems with 3 phase motors
Current	Maximum, Minimum & Average over each 10 minute period.	LV Feeder storage connection		?			Need to know whether changing or discharging and rate, also needed for current harmonic analysis.
Current Harmonic Distortion to 50th	Maximum, Minimum & Average over each 10 minute period for all harmonics up to 50th order + value for Total Harmonic Distortion.	LV Feeder storage connection		?			To determine the harmonic impedence of the network

Parameter	Requirements	Measurement Location	EAVC	LV EES	EV/HP Impact	PV Impact	Purpose?
Flicker	Pst and Plt measurements	LV Feeder storage connection		⍰			to determine if Storage has improved and if so by how much.
Phase Angle	Derived from voltage and current measurements	LV Feeder storage connection		⍰			To determine if export or importing and check if there are power factor problems on the network.
Power	Derived from voltage and current measurements	LV Feeder storage connection		⍰			To determine Charge / Discharge rate
Voltage	Maximum, Minimum & Average over each 10 minute period.	LV Feeder storage connection		⍰			To determine degree to which storage improves voltage profile along feeder
Voltage Harmonic Distortion to 50th order	Maximum, Minimum & Average over each 10 minute period for all harmonics up to 50th order + value for Total Harmonic Distortion.	LV Feeder storage connection		⍰			To determine whether exceeding planning limits of G5/4 or EMC limits
Voltage Unbalance	Maximum, Minimum & Average over each 10 minute period.	LV Feeder storage connection		⍰			To see whether storage alleviates the unbalance above the P29 unbalance level limits of 2% which might cause problems with 3 phase motors
Ambient Temperature	Maximum, Minimum & Average over each 10 minute period.	Substation LV Board			⍰		For correlation with Power Measurements (From Voltage & Current Measurements)
Current	Maximum, Minimum & Average over each 10 minute period.	Substation LV Board		⍰	⍰	⍰	Need to know the power of rating, also needed for current harmonic analysis.
Current Harmonic Distortion	Maximum, Minimum & Average over each 10 minute period for all harmonics up to 50th order + value for Total Harmonic Distortion.	Substation LV Board	⍰	⍰	⍰	⍰	To determine the harmonic impedance of the network
Flicker	Pst and Plt measurements	Substation LV Board	⍰	⍰	⍰	⍰	to determine whether flicker is above p28 limits and /or has it deteriorated or improved

Parameter	Requirements	Measurement Location	EAVC	LV EES	EV/HP Impact	PV Impact	Purpose?
Insolation Levels	Maximum, Minimum & Average over each 10 minute period.	Substation LV Board				⍰	To correlate with power measurements (from Voltage & Current measurements)
Phase Angle	Derived from voltage and current measurements	Substation LV Board		⍰	⍰	⍰	To understand the power factor of the load.
Power	Derived from voltage and current measurements	Substation LV Board		⍰	⍰	⍰	To compare with ratings
Voltage	Maximum, Minimum & Average over each 10 minute period.	Substation LV Board		⍰	⍰	⍰	Monitor Source Conditions to check if within statutory limits, also to see if power is importing or exporting by checking volts against volts of upstream supply. Also to establish baseline for comparison of feeder end point conditions.
Voltage Harmonic Distortion	Maximum, Minimum & Average over each 10 minute period for all harmonics up to 50th order + value for Total Harmonic Distortion.	Substation LV Board	⍰	⍰	⍰	⍰	To determine whether exceeding planning limits of G5/4 or EMC limits
Voltage Unbalance	Maximum, Minimum & Average over each 10 minute period.	Substation LV Board	⍰	⍰	⍰	⍰	To see whether unbalance above the P29 unbalance level limits of 2% which might cause problems with 3 phase motors
Current	Maximum, Minimum & Average over each 10 minute period.	Substation LV Board: At the point of connection of the transformer to the LV board.	⍰				To calculate the power, also needed for current harmonic analysis.

Parameter	Requirements	Measurement Location	EAVC	LV EES	EV/HP Impact	PV Impact	Purpose?
Phase Angle	Derived from voltage and current measurements	Substation LV Board: At the point of connection of the transformer to the LV board.	?				To determine if exporting or importing and check if there are power factor problems on the network.
Power	Derived from voltage and current measurements	Substation LV Board: At the point of connection of the transformer to the LV board.	?				To compare with ratings
Voltage	Maximum, Minimum & Average over each 10 minute period.	Substation LV Board: At the point of connection of the transformer to the LV board.	?				Monitor Source Conditions to check if within statutory limits, also to see if power is importing or exporting by checking volts against volts of upstream supply. Also to establish baseline for comparison of feeder end point conditions.

Appendix IV CLNR HV Monitoring

The table below shows the initially specified requirements for measurements that are made at HV for control and monitoring purposes.

LCT	Parameters	Requirements	Location	Description	Purpose
EAVC	Voltage	Maximum, Minimum & Average over each 1 minute period.	Denwick Primary	Transformer 1 tap change control	To determine whether a change to set point is advisable
EAVC	Current	Maximum, Minimum & Average over each 1 minute period.			Input required for GUS control algorithms
EAVC	Phase Angle	Derived from voltage and current measurements			Input required for GUS control algorithms
EAVC	Tap Position				Input required for GUS control algorithms
EAVC	Voltage	Maximum, Minimum & Average over each 1 minute period.		Transformer 2 tap change control	Input required for GUS control algorithms
EAVC	Current	Maximum, Minimum & Average over each 1 minute period.			Input required for GUS control algorithms
EAVC	Phase Angle	Derived from voltage and current measurements			Input required for GUS control algorithms
EAVC	Tap Position				Input required for GUS control algorithms
EAVC	Voltage	Maximum, Minimum & Average over each 1 minute period.	Glanton	20kV Regulator tap change control	Input required for GUS control algorithms
EAVC	Current	Maximum, Minimum & Average over each 1 minute period.			Input required for GUS control algorithms

LCT	Parameters	Requirements	Location	Description	Purpose
EAVC	Phase Angle	Derived from voltage and current measurements			Input required for GUS control algorithms
EAVC	Tap Position				Input required for GUS control algorithms
EAVC	Voltage	Maximum, Minimum & Average over each 1 minute period.	Hepburn Bell	20kV Regulator tap change control	Input required for GUS control algorithms
EAVC	Current	Maximum, Minimum & Average over each 1 minute period.			Input required for GUS control algorithms
EAVC	Phase Angle	Derived from voltage and current measurements			Input required for GUS control algorithms
EAVC	Tap Position				Input required for GUS control algorithms
EAVC	Voltage	Maximum, Minimum & Average over each 1 minute period.	Hedgely Moor	20kV Capacitor Bank control	Input required for GUS control algorithms
EAVC	Feeder Current	Maximum, Minimum & Average over each 1 minute period.			Input required for GUS control algorithms
EAVC	Phase Angle	Derived from voltage and current measurements			Input required for GUS control algorithms
EAVC	Available capacitor stages				Input required for GUS control algorithms
EAVC	Voltage	Maximum, Minimum & Average over each 1 minute period.	Rise Carr Primary	Transformer 1 tap change control	Input required for GUS control algorithms
EAVC	Current	Maximum, Minimum & Average over each 1 minute period.			Input required for GUS control algorithms
EAVC	Phase Angle	Derived from voltage and current measurements			Input required for GUS control algorithms
EAVC	Tap Position				Input required for GUS control algorithms

LCT	Parameters	Requirements	Location	Description	Purpose
EAVC	Voltage	Maximum, Minimum & Average over each 1 minute period.		Transformer 2 tap change control	Input required for GUS control algorithms
EAVC	Current	Maximum, Minimum & Average over each 1 minute period.			Input required for GUS control algorithms
EAVC	Phase Angle	Derived from voltage and current measurements			Input required for GUS control algorithms
EAVC	Tap Position				Input required for GUS control algorithms
EAVC	Voltage	Maximum, Minimum & Average over each 1 minute period.	Lloyd's Foundry	6kV Feeder end	Input required for GUS control algorithms
OHL RTTR	Current	Maximum, Minimum & Average over each 1 minute period.	Denwick Primary	66kV Overhead Line – Tower No 132	used to assess the available thermal capacity of the individual asset
OHL RTTR	Conductor Temperature				used to assess the available thermal capacity of the individual asset
OHL RTTR	Ambient Temperature				used to assess the available thermal capacity of the individual asset
OHL RTTR	Wind Speed				used to assess the available thermal capacity of the individual asset
OHL RTTR	Wind Direction				used to assess the available thermal capacity of the individual asset
OHL RTTR	Insolation Levels				used to assess the available thermal capacity of the individual asset
OHL RTTR	Available Capacity (A)				used to assess the available thermal capacity of the individual asset
OHL	Current		Grange	66kV Overhead Line	used to assess the available thermal capacity of the

LCT	Parameters	Requirements	Location	Description	Purpose
RTTR			Wood	– Tower No 50	individual asset
OHL RTTR	Conductor Temperature				used to assess the available thermal capacity of the individual asset
OHL RTTR	Ambient Temperature				used to assess the available thermal capacity of the individual asset
OHL RTTR	Wind Speed				used to assess the available thermal capacity of the individual asset
OHL RTTR	Wind Direction				used to assess the available thermal capacity of the individual asset
OHL RTTR	Insolation Levels				used to assess the available thermal capacity of the individual asset
OHL RTTR	Available Capacity (A)				used to assess the available thermal capacity of the individual asset
Tx RTTR	Voltage (20kV)	Maximum, Minimum & Average over each 1 minute period.	Denwick Primary	66/20kV Transformer 1	used to assess the available thermal capacity of the individual asset
Tx RTTR	Current	Maximum, Minimum & Average over each 1 minute period.			used to assess the available thermal capacity of the individual asset
Tx RTTR	Phase Angle	Derived from voltage and current measurements			used to assess the available thermal capacity of the individual asset
Tx RTTR	Ambient Temperature				used to assess the available thermal capacity of the individual asset
Tx RTTR	Oil Temperature				used to assess the available thermal capacity of the individual asset

LCT	Parameters	Requirements	Location	Description	Purpose
Tx RTTR	Insolation Levels				used to assess the available thermal capacity of the individual asset
Tx RTTR	Available Capacity (A)				used to assess the available thermal capacity of the individual asset
Tx RTTR	Voltage (20kV)	Maximum, Minimum & Average over each 1 minute period.	Denwick Primary	66/20kV Transformer 2	used to assess the available thermal capacity of the individual asset
Tx RTTR	Current	Maximum, Minimum & Average over each 1 minute period.			used to assess the available thermal capacity of the individual asset
Tx RTTR	Phase Angle	Derived from voltage and current measurements			used to assess the available thermal capacity of the individual asset
Tx RTTR	Ambient Temperature				used to assess the available thermal capacity of the individual asset
Tx RTTR	Oil Temperature				used to assess the available thermal capacity of the individual asset
Tx RTTR	Insolation Levels				used to assess the available thermal capacity of the individual asset
Tx RTTR	Available Capacity (A)				used to assess the available thermal capacity of the individual asset
OHL RTTR	Current	Maximum, Minimum & Average over each 1 minute period.	Broxfield	20kV Pole No 12	used to assess the available thermal capacity of the individual asset
OHL RTTR	Conductor Temperature				used to assess the available thermal capacity of the individual asset
OHL RTTR	Ambient Temperature				used to assess the available thermal capacity of the individual asset

LCT	Parameters	Requirements	Location	Description	Purpose
OHL RTTR	Wind Speed				used to assess the available thermal capacity of the individual asset
OHL RTTR	Wind Direction				used to assess the available thermal capacity of the individual asset
OHL RTTR	Insolation Levels				used to assess the available thermal capacity of the individual asset
OHL RTTR	Available Capacity (A)				used to assess the available thermal capacity of the individual asset
OHL RTTR	Current	Maximum, Minimum & Average over each 1 minute period.	Shipley White House	20kV Pole No 29	used to assess the available thermal capacity of the individual asset
OHL RTTR	Conductor Temperature				used to assess the available thermal capacity of the individual asset
OHL RTTR	Ambient Temperature				used to assess the available thermal capacity of the individual asset
OHL RTTR	Wind Speed				used to assess the available thermal capacity of the individual asset
OHL RTTR	Wind Direction				used to assess the available thermal capacity of the individual asset
OHL RTTR	Insolation Levels				used to assess the available thermal capacity of the individual asset
OHL RTTR	Available Capacity (A)				used to assess the available thermal capacity of the individual asset
OHL RTTR	Current	Maximum, Minimum & Average over each 1 minute period.	Broomhouse	20kV Pole No 33	used to assess the available thermal capacity of the individual asset

LCT	Parameters	Requirements	Location	Description	Purpose
OHL RTTR	Conductor Temperature				used to assess the available thermal capacity of the individual asset
OHL RTTR	Ambient Temperature				used to assess the available thermal capacity of the individual asset
OHL RTTR	Wind Speed				used to assess the available thermal capacity of the individual asset
OHL RTTR	Wind Direction				used to assess the available thermal capacity of the individual asset
OHL RTTR	Insolation Levels				used to assess the available thermal capacity of the individual asset
OHL RTTR	Available Capacity (A)				used to assess the available thermal capacity of the individual asset
OHL RTTR	Current	Maximum, Minimum & Average over each 1 minute period.	Scar Brae	20kV Pole No 61	used to assess the available thermal capacity of the individual asset
OHL RTTR	Conductor Temperature				used to assess the available thermal capacity of the individual asset
OHL RTTR	Ambient Temperature				used to assess the available thermal capacity of the individual asset
OHL RTTR	Wind Speed				used to assess the available thermal capacity of the individual asset
OHL RTTR	Wind Direction				used to assess the available thermal capacity of the individual asset
OHL RTTR	Insolation Levels				used to assess the available thermal capacity of the individual asset

LCT	Parameters	Requirements	Location	Description	Purpose
OHL RTTR	Available Capacity (A)				used to assess the available thermal capacity of the individual asset
OHL RTTR	Voltage		Hedgely Moor	RTTR circuit	to assess whether, where the additional capacity of a circuit is fully utilised, the effect does not have an adverse effect upon the voltage profile of the network
Cable RTTR	Voltage	Maximum, Minimum & Average over each 1 minute period.	Norton	Rise Carr Feeder 1 33kV Cable	used to assess the available thermal capacity of the individual asset
Cable RTTR	Current	Maximum, Minimum & Average over each 1 minute period.	Bulk Supply Point		used to assess the available thermal capacity of the individual asset
Cable RTTR	Phase Angle	Derived from voltage and current measurements			used to assess the available thermal capacity of the individual asset
Cable RTTR	Soil Temperature				used to assess the available thermal capacity of the individual asset
Cable RTTR	Cable Sheath Temperature				used to assess the available thermal capacity of the individual asset
Cable RTTR	Insolation Levels				used to assess the available thermal capacity of the individual asset
Cable RTTR	Available Capacity (A)				used to assess the available thermal capacity of the individual asset
Cable RTTR	Current	Maximum, Minimum & Average over each 1 minute period.	Terminal Tower 48	Rise Carr Feeder 1 33kV Cable	used to assess the available thermal capacity of the individual asset
Cable RTTR	Soil Temperature				used to assess the available thermal capacity of the individual asset

LCT	Parameters	Requirements	Location	Description	Purpose
Cable RTTR	Cable Sheath Temperature				used to assess the available thermal capacity of the individual asset
Cable RTTR	Insolation Levels				used to assess the available thermal capacity of the individual asset
Cable RTTR	Available Capacity (A)				used to assess the available thermal capacity of the individual asset
Tx RTTR	Voltage (6kV)	Maximum, Minimum & Average over each 1 minute period.	Rise Carr Primary	33/6kV Transformer 1	used to assess the available thermal capacity of the individual asset
Tx RTTR	Current	Maximum, Minimum & Average over each 1 minute period.			used to assess the available thermal capacity of the individual asset
Tx RTTR	Phase Angle	Derived from voltage and current measurements			used to assess the available thermal capacity of the individual asset
Tx RTTR	Ambient Temperature				used to assess the available thermal capacity of the individual asset
Tx RTTR	Oil Temperature				used to assess the available thermal capacity of the individual asset
Tx RTTR	Insolation Levels				used to assess the available thermal capacity of the individual asset
Tx RTTR	Available Capacity (A)				used to assess the available thermal capacity of the individual asset
Tx RTTR	Voltage (6kV)	Maximum, Minimum & Average over each 1 minute period.		33/6kV Transformer 2	used to assess the available thermal capacity of the individual asset
Tx RTTR	Current	Maximum, Minimum & Average over each 1 minute period.			used to assess the available thermal capacity of the individual asset

LCT	Parameters	Requirements	Location	Description	Purpose
Tx RTTR	Phase Angle	Derived from voltage and current measurements			used to assess the available thermal capacity of the individual asset
Tx RTTR	Ambient Temperature				used to assess the available thermal capacity of the individual asset
Tx RTTR	Oil Temperature				used to assess the available thermal capacity of the individual asset
Tx RTTR	Insolation Levels				used to assess the available thermal capacity of the individual asset
Tx RTTR	Available Capacity (A)				used to assess the available thermal capacity of the individual asset
Cable RTTR	Voltage	Maximum, Minimum & Average over each 1 minute period.		Foundry Circuit 6kV cable	used to assess the available thermal capacity of the individual asset
Cable RTTR	Current	Maximum, Minimum & Average over each 1 minute period.			used to assess the available thermal capacity of the individual asset
Cable RTTR	Phase Angle	Derived from voltage and current measurements			used to assess the available thermal capacity of the individual asset
Cable RTTR	Soil Temperature				used to assess the available thermal capacity of the individual asset
Cable RTTR	Cable Sheath Temperature				used to assess the available thermal capacity of the individual asset
Cable RTTR	Insolation Levels				used to assess the available thermal capacity of the individual asset
Cable RTTR	Available Capacity (A)				used to assess the available thermal capacity of the individual asset

LCT	Parameters	Requirements	Location	Description	Purpose
Cable RTTR	Voltage	Maximum, Minimum & Average over each 1 minute period.	Lloyd's Foundry	6kV Feeder End Voltage	to assess whether, where the additional capacity of a circuit is fully utilised , the effect does not have an adverse effect upon the voltage profile of the network
EES	Voltage	Maximum, Minimum & Average over each 1 minute period.	Rise Carr Primary	EES1 – 5 MWh storage	To determine degree to which storage improves voltage profile along feeder
EES	Current	Maximum, Minimum & Average over each 1 minute period.			To determine whether changing or discharging and rate.
EES	Phase Angle	Derived from voltage and current measurements			To determine if export or importing and check if there are power factor problems on the network.
EES	EES available capacity				

Customer-Led Network Revolution

For enquires about the project
contact info@networkrevolution.co.uk
www.networkrevolution.co.uk