Customer-Led Network Revolution

Lessons Learned Report

Electrical Energy Storage

DOCUMENT NUMBER
CLNR-L163

AUTHORS
John Baker, James Cross, EA Technology Ltd
Ian Lloyd, Northern Powergrid

PUBLISHED
08 December 2014

Customer-Led Network Revolution

Contents

Reviewed by	Ian Lloyd, Northern Powergrid
Approved by	Chris Thompson, Northern Powergrid

Date	Issue	Status
08/12/14	1.0	Published

Executive Summary

The Customer-Led Network Revolution (CLNR) project has successfully procured, commissioned and operated six Electrical Energy Storage systems, including the largest battery energy storage system currently commissioned in Europe. Each of the six units has been operated to provide thermal, voltage and reactive power support to the Northern Powergrid distribution network, operated both remotely via the CLNR Active Network Management System and as part of an autonomous intelligent substation.

Throughout the CLNR project, an enormous amount of experience has been developed installing and operating Electrical Energy Storage. This report documents the many challenges which have arisen and notes lessons learned, both where challenges would be approached differently in future and where challenges were overcome well. This report is structured to group Lessons Learned with the stages of the project lifecycle to which they apply.

The performance of the CLNR Electrical Energy Storage systems has been measured and analysed by the CLNR project's academic partners. The capability of Electrical Energy Storage systems to mitigate voltage and thermal constraints at several points on a distribution network has been demonstrated, subject to the constraints of the systems' specification. Each of the commissioned systems has been shown to meet its specified performance parameters in terms of capacity, efficiency, real and reactive power capabilities and response time.

CLNR has demonstrated that Electrical Energy Storage is a proven technology, which may be procured through normal business processes, for small and medium scale applications; despite a number of challenges around scale and maturity of the market. In addition, the skills now exist to integrate Electrical Energy Storage onto a distribution network and to operate Electrical Energy Storage to benefit the distribution network. Northern Powergrid will consider any requests for supply of the expertise built up during the CLNR project.

Despite the gains made through the CLNR project, Electrical Energy Storage remains an expensive technology whose economic benefits appear greater for provision of energy trading, balancing services and renewables integration than for the avoidance of distribution network reinforcement. Therefore, in the short term it is reasonable to expect energy supply and trading companies to develop and procure this technology. However, Northern Powergrid will consider real power support services at 6 kV and above but are unlikely to invest further in Electrical Energy Storage in the near future; and will work to evaluate the additional distribution network benefits provided by storage, including phase re-balancing and harmonic filtering.

The three key lessons learned are listed in the table below:

Item	Details	Reference
1	Early engagement with Health and Safety stakeholders proved highly beneficial. The identification of hazards and the mitigation measures to reduce risk has been well received by our Health and Safety colleagues, the emergency services and the wider industry stakeholders.	EES LL 5.1 EES LL 5.2 EES LL 5.3 EES LL 5.7
2	Managing change and integrating combinations of novel technologies onto the network, required a higher degree of specialist input than anticipated. This was particularly important in the manufacturing and commissioning stages and these challenges could not be resolved using outsourced resources. Development of the storage projects in parallel with our new control platform added further to this complexity. Increased face-to-face time with suppliers throughout the process may have helped to reduce this complexity.	EES LL 3.1 EES LL 4.2 EES LL 4.3 EES LL 4.4 EES LL 4.5 EES LL 7.2
3	Noise emission surveys were taken at each EES location pre-installation. These proved to be crucial baseline measurements, as residents at the rural locations made noise complaints during the summer months whilst the EES systems were under full trials operations and temperatures were high. The EES2 and EES3 units in our rural locations subsequently had noise attenuation shrouds installed and this measure has satisfied the residents.	EES LL 5.2 EES LL 8.4

Glossary

ADSL	Asymmetric Digital Subscriber Line (Data Communications Technology)
BS	British Standards
BaU	Business-as-Usual
CAT5	Category 5 (Signal Cable)
CDM	Construction (Design and Management) Regulations
CLNR	Customer-Led Network Revolution
COSHH	Control of Substances Hazardous to Health
DNO	Distribution Network Operator
DSR	Demand Side Response
EAVC	Enhanced Automatic Voltage Control
EES	Electrical Energy Storage
EHV	Extra High Voltage
ESOF	Energy Storage Operators Forum
ESQCR	Electricity Safety, Quality and Continuity Regulations
EU	European Union
FAT	Factory Acceptance Test
FSS	Fire Suppression System
GPRS	General Packet Radio Service (Mobile Data Service)
GUS	Grand Unified Scheme (Control Infrastructure)
HAZID	Hazard Identification Study
HAZOP	Hazard and Operability Study
HSE	Health and Safety Executive
HV	High Voltage
HVAC	Heating, Ventilation and Air Conditioning
IEEE	Institution of Electrical and Electronics Engineers
ISO	International Standards Organisation
ITT	Invitation to Tender
Li-Ion	Lithium-Ion
LL	Lesson Learned
LV	Low Voltage
MSDS	Materials Safety Data Sheet
NDA	Non-Disclosure Agreement
NEC ES	NEC Energy Solutions, Inc.
NPg	Northern Powergrid
NPS	Network Product Specification
PV	Photovoltaic
RTTR	Real-Time Thermal Ratings
SCADA	Supervisory Control and Data Acquisition (System)
SLD	Single Line Diagram
T's&C's	Terms and Conditions
VEEEG	Validation, Extensions, Extrapolation, Enhancement, Generalisation
VPN	Virtual Private Network

1. Introduction

1.1 Customer-Led Network Revolution project

The Customer-Led Network Revolution (CLNR) Project is a four-year project, led by Northern Powergrid (NPg), trialling Smart Grid solutions within the NPg distribution network as well as creating smart-enabled homes to give customers more flexibility over the way they use and generate electricity. The results will help the industry to ensure the electricity networks can handle the mass introduction of solar PV panels, electric cars and other low-carbon technologies.

The objective of the CLNR project is to understand five Learning Outcomes, which are:

- Learning Outcome 1 – What are the current, emerging and possible future customer (load and generation) characteristics?
- Learning Outcome 2 – To what extent are customers flexible in their load and generation, and what is the cost of this flexibility?
- Learning Outcome 3 – To what extent is the network flexible and what is the cost of this flexibility?
- Learning Outcome 4 – What is the optimum solution to resolve network constraints driven by the transition to a low carbon economy?
- Learning Outcome 5 – What are the most cost effective means to deliver optimal solutions between customer, supplier and distributor?

The CLNR project aims to understand the value of the different solutions in terms of being able to balance supply and demand while deferring investment in conventional reinforcement of the distribution network, and so facilitating the transition to a low-carbon economy while avoiding additional reinforcement costs. The project has studied how this can be achieved by incorporating three network based technologies: Enhanced Automatic Voltage Control (EAVC), Real Time Thermal Ratings (RTTR) and Electrical Energy Storage (EES); in addition to customer flexibility solutions.

This report documents the lessons learned about EES from the process of initial design, through commissioning, to operation and maintenance and is intended to support organisations considering implementing EES on the transmission or distribution network.

1.2 Electrical Energy Storage

The CLNR project has successfully procured, commissioned and operated six Electrical Energy Storage (EES) systems, including the largest battery energy storage system currently commissioned in Europe. The EES procurement was effectively started in May 2011 with the final system successfully commissioned in December 2013. The CLNR EES systems have been demonstrated operating as part of an autonomous, intelligent, substation and under the contract of the Active Network Management system (the GUS) to mitigate thermal and voltage constraints on the distribution network.

Electrical Energy Storage has been implemented at different network nodes, shown in Figure 1.1, for the following reasons:

- EES1 (one off): A primary substation, to offload the primary transformer and incoming EHV feeders, in addition to providing voltage support by using reactive power capabilities to optimise power factor and reduce losses.
- EES2 (two off): At secondary substations, to offload secondary (distribution) transformers and any upstream constraints, in addition to providing voltage support by using reactive power capabilities to optimise power factor and reduce losses.
- EES3 (three off): To offload LV feeders to which the EES is connected and any upstream constraints, in addition to providing voltage support by using reactive power capabilities to optimise power factor and reduce losses.

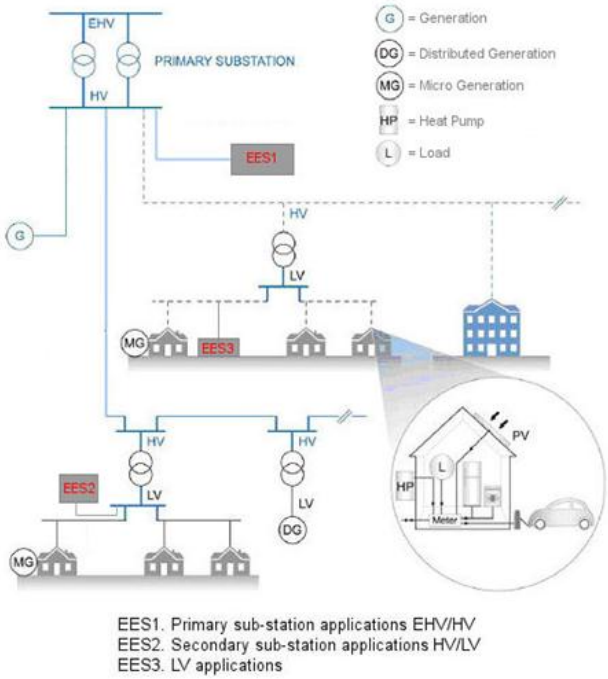

Figure 1.1 – EES trial solutions at different nodes of the electrical network

1.3 Process and methodology for gathering lessons learned

Lessons learned for each of the network based technologies (EAVC, EES, RTTR and GUS) were gathered via a series of structured workshops, complemented and supported by a series of site visits. In the case of the EES review, these comprised a series of visits in the installation and construction phase, in 2013, together with a further visit, to the operational sites in the Darlington area, July 2014.

The Lessons Learned Workshops allowed personnel specialising in all aspects of the project - ranging from procurement to health and safety, commissioning and project management - to reflect on the progress of the project and any aspects which challenged or showed learning opportunities. Lessons learned have been identified both where things may have been done differently with hindsight and as a result of the projects successes.

This report principally documents the outcomes of the structured EES Lessons Learned Workshop complemented and supported by additional inputs from specific reference sources and subsequent follow-up with key staff.

2. Electrical Energy Storage overview

2.1 General description of Electrical Energy Storage

Electrical Energy Storage (EES) is increasingly recognised as a key enabling technology supporting the transition to a low-carbon economy. By allowing energy to be stored at different points in the distribution network, within the restrictions of the installations, the network can realise a number of benefits. The CLNR project attempted to utilise the fleet of batteries installed to trial some of the anticipated benefits including:

- Deferral of asset replacement or reinforcement by reducing the effective peak load seen by that asset to overcome a thermal constraint.
- Power system optimisation such as frequency support; three-phase balancing; and control of power flow, power factor and voltage.
- Power quality support including minimising harmonic content and reducing flicker.
- Mitigation of the effects of new demand or generation connections on the distribution or transmission networks such as those caused by the inclusion of electric vehicles, solar photovoltaic generation or heat pumps.
- Provision of immediately controllable demand side response, offering time contracted demand side response suppliers time to duly respond.

Typically, an EES system will comprise:

- A storage component such as batteries or tanks to hold a physical storage medium.
- A power conversion system to enable energy storage and dispatch appropriate to the network connection. In the case of a battery system, a bi-directional inverter is typically used. This may provide additional capabilities including sourcing and sinking reactive power.
- A control system to determine when to charge and discharge, and at what rate, and at what power factor, if applicable. This may operate autonomously, via an Active Network Management system or some combination of the two.
- Appropriate electrical, communications and storage medium interconnections.

A number of technologies have been demonstrated to provide EES for distribution network applications; these include various battery energy storage systems, flow cell systems, thermodynamic cycle systems and kinetic energy storage systems. These are shown in Figure 2.1 which provides indicative ranges for comparison of rated power and capacity of a number of storage technologies.

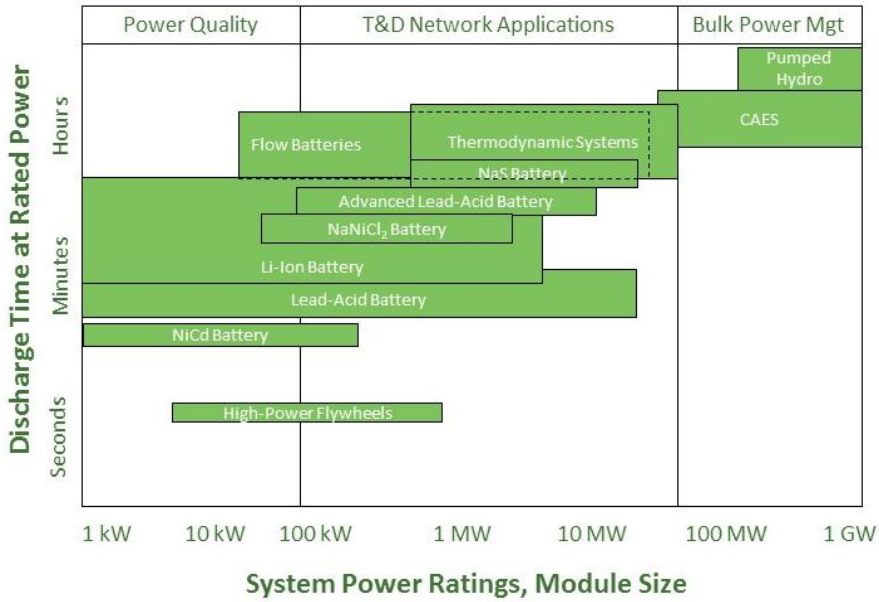

Figure 2.1 - Ragone Plot illustrating typical capabilities of different EES technologies

2.2 Network applications and desired benefits

Electrical Energy Storage is a multi-faceted technology, potentially able to service multiple applications and thereby extract value from multiple revenue streams.

Candidate application domains include arbitrage and load levelling ("traditional" storage applications), provision of spinning reserve, frequency regulation, network stability, voltage support, thermal support, renewables integration, quality of supply, power quality and deferral of asset reinforcement. The revenue/value flows associated with such applications may be attributable to one or more links in the overall electricity supply chain including transmission, distribution and energy supply. There is also scope to use the inverter for power quality improvement, such as active harmonic filtering or as a source or sink of reactive power.

Within the context of the CLNR project, the primary rationale for the application of EES is to relieve thermal overload and to provide voltage support functionality, within the NPg distribution network. In addition, the use of the EES inverters to provide reactive power support has been demonstrated.

Thermal support can be provided to relieve thermal overloads of plant. EES provides the ability to de-load upstream sections of the distribution network at times of high network demand, or thermal overload, by releasing stored energy downstream of the overloaded infrastructure where required.

Voltage support is provided to maintain supply voltages within given limits on the distribution network. Whilst functioning as part of an autonomous intelligent substation, the EES system responds to local voltage excursions as defined by the operating regime in order to maintain a target voltage. This is achieved by sourcing or sinking real and reactive power, allowing the EES system to influence the voltage at its connection point.

When in wide-area control mode the EES system responds to instructions issued by the Active Network Management which instructs the EES system to act as a source or sink of real or reactive power. This may be to provide thermal or voltage support, but the EES simply responds to the instruction to source or sink power at a specified rate and power factor.

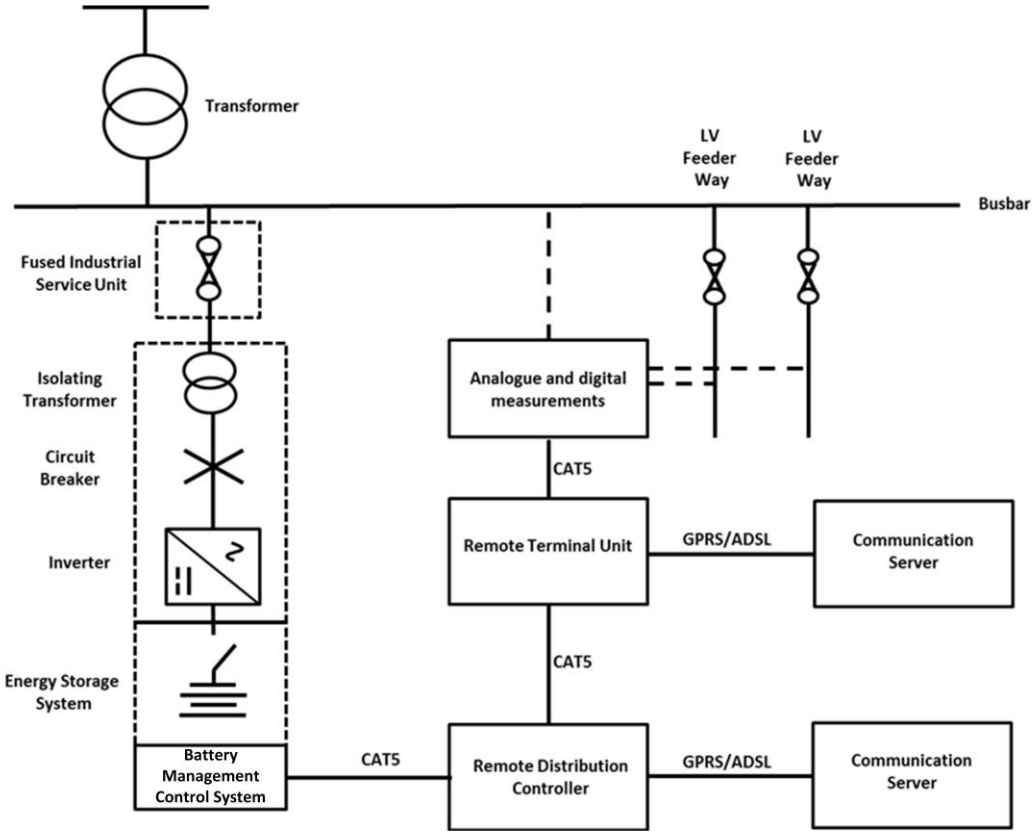

Figure 2.2 - Simplified schematic of the equipment installed for the EES systems, as fitted to EES2 and EES3.

2.3 Implementation of EES for the CLNR project

The CLNR project successfully procured and commissioned 6 EES systems, as summarised in Table 2.1. Primary applications of the EES are voltage support and "de-loading" assets to avoid thermal overload. When operating as part of an autonomous intelligent substation, voltage support is achieved by using the EES as a source or sink of real and reactive power in order to maintain a target voltage at its output. Thermal overload avoidance is achieved by providing real power downstream of thermally constrained assets in order to reduce the required power through that asset. When operating under wide-area control, the EES sources and/or sinks real and reactive power, as instructed by the Active Network Management system.

Northern Powergrid used a competitive tender process to procure the EES systems, this resulted in a single supplier – A123 Systems (now NEC Energy Solutions) – supplying all 6 systems. As each EES system was supplied by A123 Systems, the system architecture for each EES system is similar. An overview of the system architecture, applicable to all three EES systems, is shown in Figure 2.2. It should be noted that A123 Systems has been recently incorporated into NEC Energy Solutions, who now supply the technology described in this report.

Table 2.1 – EES Systems installed as part of the CLNR Project

	No of Systems	Power (kVA)	Capacity (kWh)	Connection Point	Purpose
EES1	1	2,500	5,000	Primary Substation	Voltage Control Peak Shifting Contribute to upstream support of the primary system
EES2	2	100	200	LV busbars at Distribution Substations	Voltage Support Prevention of thermal overload on HV lines and HV/LV transformer Contribute to upstream support of the primary system
EES3	3	50	100	LV Feeder	De-load LV feeder Contribute to upstream support of the primary system Voltage Support for the LV feeder

2.4 Current status of the Electrical Energy Storage deployment in the CLNR project

At the time of writing, the EES systems deployed as part of the CLNR project had been commissioned and had demonstrated the specified functionality in terms of voltage and thermal support, both acting as part of an autonomous intelligent substation and under wide-area control. The systems have completed a series of pre-planned trials designed in coordination with academic partners at Newcastle University to determine their performance and impact on the network, with respect to their expected performance.

Image 1: 2.5MVA / 5MWh EES device at Rise Carr, Darlington, UK

3. Design, specification development and procurement lessons learned

3.1 Design

The EES design phase was started in May 2011, when work started on a design review of EES, which addressed:

- The network operational characteristics and interface requirements, for the (then) candidate sites for the EES1, EES2 and EES3 systems.
- The derivation of the desired operational regimes, for each of three ratings of EES system being considered. This was based upon consideration of the various applications and functionalities required, at the different parts of the NPg distribution network, under consideration.
- The design of the systems, in terms of their essential functional requirements and their network interface and control system requirements, with special reference to their interaction with the Active Network Management system.
- The formulation of design options, via a review of the various storage technology options available, for each of the EES1, EES2 and EES3 systems, and their relative merits and penalties.
- The production of a formal design report, intended to inform the CLNR scheme architect, of the functionalities desired, and also to inform the development of the subsequent procurement specifications.

This work was duly completed via the publication of the document "Design of EES for CE Electric UK Customer Led Network Revolution" in July 2011.

3.2 Specification development

Formal procurement specifications were developed in a condensed time period, August/September 2011, such as to satisfy the requirement for the initiation of the tendering process by the end of September 2011. This timescale was based on the anticipated product lead times, in order to allow the hardware to be in place December 2012, in line with the ambitious timescale requirements of the wider project.

The Network Product Specifications (NPS) developed for the EES aspects of the CLNR Project therefore comprised:

- NPS/007/001 – Technical Specification for EES1 Electrical Energy Storage System (nominal 2.5MVA/5MWh)
- NPS/007/002 – Technical Specification for EES2 Electrical Energy Storage System (nominal 100kVA/200kWh)
- NPS/007/003 – Technical Specification for EES3 Electrical Energy Storage System (nominal 50kVA/100kWh)

The NPS's themselves were complemented by the development of a series of Site/Project Specific Addenda, which set out and described the site and project specific requirements, for each of the systems considered. It should be noted that the NPSs are specific to the EES requirements of the CLNR project and were not intended to provide a generic specification for general EES applications.

It was agreed at the Lessons Learned workshop that the Network Procurement Specification documents were fit for purpose, although it was felt that acceptable acoustic emission (noise) levels would be specified for future projects, this is discussed in the operational context in Section 8.2.1.

The specification of acceptable noise and vibration levels for any piece of plant or equipment must take into account the characteristics of the sources themselves and the environment in which the source will be placed. This therefore makes the specification of a simple dB(A) figure somewhat problematical for more complex plant, such as some of the EES systems, which may include such individual acoustic emitters as:-

- Transformers
- Contactors
- Power Conversion Systems
- Heating, ventilation and air conditioning plant, which in itself could include pumps, fans and compressors.

Based on the learning from the CLNR project, a series of revised NPSs have been developed, with further and more specific requirements for acceptable acoustic emission levels from such plant, based on the relevant British Standard[1].

A more general observation was that, with hindsight, greater attention should have been paid to defining the methodology for the integration of the EES and other network technologies, within the context of the wider CLNR project. Various examples of missing or late information were cited in relation to the EES systems, including those in relation to various interface requirements, such as static and dynamic ground loadings, as required for the complementary ground works. It was also noted that safety case assessment and the associated development of the requisite Risk Assessments should have been addressed from the outset of the project, rather than being picked up once the procurement of the systems was well underway. This latter aspect is discussed further in Section 5.

3.3 Procurement

The procurement of the EES systems was handled in accordance with NPg's standard procurement procedures, consistent with European public procurement Directives and their incorporation into United Kingdom legislation as the Utilities Contracts Regulations (2006). It was felt that this had been the correct approach to have taken as it allowed the CLNR project to demonstrate Business-as-Usual (BaU) procurement of the EES systems, and the associated challenges.

[1] BS 4142:1997 "Method for Rating industrial noise affecting mixed residential and industrial areas"

Within these procurement regulations, it is possible to apply an R&D exemption, as may be deemed appropriate. NPg's pre-bid work, conducted mid-2010 indicated that there was a range of EES systems available, on commercial terms, from a cross-section of suppliers. This aspect of the procurement was discussed in-house, prior to initiating the process, with the following considerations noted:

- An existing market in EES systems appeared to be in existence
- A formal competitive tendering process would allow for a full range of commercial offers to be received (in practice, ranging from £4M to £27M for the largest EES system)
- As the converse of the above, progression via the R&D exemption route, via a single Tender, may well have resulted in NPg paying significantly more than the market price, for a technology that may well have been no better than that procured via competitive tendering

Therefore, it was not thought appropriate to apply for any R&D exemption in the case of the EES systems or their component battery modules. A further benefit obtained, via the pursuit of the procurement under BaU processes, was to demonstrate that the procurement of such a new - to the GB DNO sector - technology could be accommodated with these processes, with all the associated benefits this provides, in terms of delivering value to the customer. However, it was commented that the procurement process did serve to challenge the view that EES is truly a "market ready" technology for the GB DNO sector, at this stage of its development.

The procurement of the EES systems was processed via the Achilles utilities vendor database, with there being three main stages to this:

1. An e:Qual stage, where a series of specific questions were tabled, to establish the capability of the candidate suppliers, as organisations
2. The subsequent issue of a formal Invitation to Tender (ITT), to a sub-set of these candidate suppliers
3. The receipt and evaluation of the Tenders received

In practice, the application of this process resulted in a very rapid reduction in the number of options available:

- e:Qual: Issued to 312 candidate suppliers; of which
- 15 were judged as suitable for issue of formal ITT's; out of which
- 6 Tender responses were actually received.

The very high number of e:Qual invitations issued was partly an artefact of the Achilles system's classification codes and, in particular, the absence of any specific code for network connected Electrical Energy Storage. The requirement to demonstrate a fully open and transparent bidding process therefore required e:Qual invitations to be extended to companies in various classification codes, many of these were perhaps only marginally related to the true requirement.

The ITT's originally called for a three week turnaround from the candidate suppliers. The major driver for this ambitious timescale was that of the overall CLNR project. In practice, the vast majority of organisations wishing to tender could not meet this and requested extensions; the Tender window was therefore extended to a 6 week timescale.

The evaluation of the Tender responses addressed a series of considerations, with specific weightings being applied to these, as shown below:

- Technical compliance: To be assessed as either compliant or non-compliant
- If judged to be technically compliant, then evaluated relative to specific considerations in relation to:
    - Price (40% weighting)
    - Lead time (40% weighting)
    - Terms and Conditions (20% weighting)

Suppliers were provided with the opportunity to tender for the supply of the EES1, EES2 and EES3 systems, either individually (for example via a response for the supply of a single EES3 system), or collectively (via the supply of the full complement of 1 off EES1, 2 off EES2 and 3 off EES3 systems). No weighting was applied in favour of a single source supplier. However, considerable benefits are believed to have accrued from this supply route, in terms of logistics, maintenance and overall project management savings, compared with two or three separate suppliers.

It is also worth noting the 40% weighting applied to the lead time consideration. This was a key driver, from the wider CLNR project perspective, with a view to integrating the EES systems with the project, as a whole. Information in relation to the weighting criteria was not passed to candidate suppliers, as part of the procurement process.

Following receipt of tender returns from the invited suppliers, NPg selected candidate suppliers for post tender negotiation. The candidate suppliers each participated in a number of conference calls, which allowed the suppliers to present their tender submissions and gave the procurement team the opportunity to request further input from the supplier.

The completion of the procurement process led to the award of the contract for all three EES system categories to A123 Systems (now NEC Energy Systems); the only sole provider able to meet the stringent technical footprint requirement, on all three systems.

The procurement led to significant learning, in terms of the need to recognise and manage the risk associated with procurement from a supplier which was unproven to both NPg and the wider GB DNO sector. It was noted that had time allowed, NPg would have visited previous customers of A123 Systems who acted as referees. In practice, NPg conducted a series of conference calls with referees, but it was believed that a site visit would have given clearer insight into the technical readiness of the technology.

The financial stability of the supplier became a point of concern during the manufacturing stage of the project. Whilst a formal supplier audit was not conducted prior to Contract Award, the credit checks undertaken at award did not highlight any concerns. The master timescales for the overall CLNR project were the dominant driver, with the imperative to place the contract award with the chosen supplier such that they could deliver, consistent with their stated 48 week lead time, by end 2012.

Normal NPg procurement practice in such scenarios is for a supplier audit to be conducted post Contract Award, with the proviso of an escape clause, should the supplier be deemed to be unsatisfactory. In practice, NPg did arrange for an audit of A123 Systems to be performed by their US sister company – PacificCorp – some 6 months post Contract Award. PacificCorp's visit to A123 Systems was itself delayed, by A123 Systems insisting on a separate Non-Disclosure Agreement (NDA) to be in place, to cover this visit. NPg themselves did not visit A123 Systems until September 2012, the time of the HAZOP study on the system. In addition to the credit checks included as part

of the registration process for the Achilles system and the NPg supplier audit, NPg took up references for previous A123 Systems customers and placed three conference calls. However, it has been noted that, with hindsight, a personal visit to an installed system would have been valuable.

At the Lessons Learned Workshop it was suggested that effort at commissioning may have been reduced with an increased number of visits to A123 Systems, in Boston, MA. With hindsight, it was suggested that having pre-designated site/project engineers to "shadow" the supplier, could have been advantageous. This may be undesirable for a BaU application, but it was felt this would be beneficial for a project procuring technology which is new to the DNO with a new supplier.

The comment was also passed that, culturally, GB DNOs appear to be unwilling to sanction trans-Atlantic travel on a very frequent basis. However, it was felt at the Lessons Learned workshop that future projects of this nature would significantly benefit from this approach, even considering the additional cost, which would be comparatively small relative to the hardware itself.

Developments subsequent to the Contract Award raised severe doubts, in terms of A123 Systems' commercial viability. However, credit checks leading up to the award of contract, and supplier audit following contract award, did not show anything to be amiss here.

3.4 Commercial terms

Further significant learning resulted from the negotiation of commercial terms with A123 Systems. The starting basis for these negotiations was NPg's standard T's&C's, with A123 Systems then objecting to various aspects of these and seeking a series of deviations. Such deviations then led to further protracted dialogue and negotiation, with NPg taking legal advice for the development of the final contracted terms and conditions.

For the subsequent procurement of the Active Network Management system, a different approach was adopted by the CLNR team, namely that of using the supplier T's&C's, as the essential starting basis, and then negotiating variations around these. This led to a far smoother agreement of the eventual T's&C's adopted, relative to the approach taken with A123 Systems.

3.5 Summary of design, specification development and procurement lessons learned

EES LL 3.1. The full range of risks associated with such a new technology and such a new supplier were not all immediately apparent at the outset.

EES LL 3.2. A visit to the supplier and previous customers, acting as referees, prior to awarding the contract, could have helped to identify technical risk associated with the supplier when procuring new technology.

EES LL 3.3. The network product specification (NPS) documents were fit for purpose, with their only significant omission being the specification of acceptable noise levels.

EES LL 3.4. Additional time at the beginning of the project would have allowed better definition of requirements for the pre-tender screening and tendering process.

EES LL 3.5. Difficulty with the use of the Achilles system was highlighted. No specific code exists for grid-scale energy storage, which made supplier identification difficult.

EES LL 3.6. A very limited number of suppliers were willing and able to supply grid-scale energy storage, 15 companies were invited to tender of which 6 responded.

EES LL 3.7. An overly ambitious tender return window of 3 weeks was set. This was found to be impracticable for high quality tender responses.

Image 2: Inside Rise Carr EES device

4. System integration and supplier liaison lessons learned

4.1 System integration

The system integration of the EES systems essentially addressed three distinct, albeit complementary, aspects:

- The integration of the various component sub-assemblies of the EES systems
- The integration of the complete EES systems with NPg's distribution network
- The integration of the complete EES systems with the wider CLNR project, its associated technologies and the Active Network Management system

4.1.1 Integration of the component sub-assemblies of the EES systems

The essential rationale for placing the Contract Award on an overall EES "turnkey" systems provider, such as A123 Systems, was that this aspect of the scope of supply would be entirely within such a provider's expertise and supply capability.

However, as the contract progressed, it was apparent that A123 Systems had essentially bid "concept designs", with a significant difference in the refinement and "market readiness" of these designs between the Rise Carr EES1 system and the two smaller system categories (EES2 and EES3). Specifically, A123 Systems were required to address significant engineering challenges in relation to:

- The integration of the DynaPower Power Conversion System with the EES1 battery and, in particular, the management of the interfaces between the two.
- The packaging of the complete system, within the constraints imposed by the specification for the CLNR sites.
- Development and integration of existing battery control systems with A123 Systems' new Prysmatic Cell design.
- For EES2 and EES3, reducing the existing modular design to the required size whilst retaining all the system level and safety features included in the larger systems.

In practice, NPg assisted A123 Systems to a considerable extent, in relation to the packaging of the complete EES1 system, noting the severe footprint and volume envelopes of the Rise Carr site.

However, the greater system integration challenge lay in that of the EES systems to the Active Network Management System and the wider CLNR project, as described in Section 4.1.3.

4.1.2 With the Northern Powergrid distribution network

In order to integrate the EES systems with the NPg distribution network, a series of challenges were overcome, including those in relation to:

- The management of the interfaces, particularly in the construction phase and in the context of the UK CDM Regulations (covered in more detail in Section 6).

- A123 Systems' low level of knowledge and awareness, at the outset of the project, of UK working arrangements, in general, and of GB DNO interface, control and protection requirements, in particular.
- The integration of multiple alarms, protection systems and measures.
- Ensuring the requisite degree of resilience of the systems, to such multiple alarms.
- The accommodation of the requisite protection within the "anti-islanding" loss of mains protection system, which differed significantly from the IEEE standard, which was identified during the system build, as non-compliant with the procurement specification.
- The early and timely identification of the need for NPg to address the handling procedures for the "new" (to NPg) chemicals associated with the EES systems, requiring them to be appropriately addressed, consistent with NPg's policies and procedures.

4.1.3 With the Active Network Management System (GUS) and the wider CLNR project

The challenges involved in integrating the EES systems into the wider CLNR project, and its associated control and protection systems, were significant. This resulted in a greater degree of involvement from NPg personnel in relation to advising of the implications of the GUS: EES interface requirements on the EES systems' control and protection sub-systems. It was felt that the specification for Factory Acceptance Test (FAT) would have been tighter had the Active Network Management system specification been in place prior to the procurement of the EES systems. This was believed to have contributed to some of the delays incurred during commissioning.

However, in order to deliver the CLNR project, it was necessary to develop the Active Network Management system and EES systems in parallel and so some flexibility in the interface specifications was permitted. This approach is believed to have reduced cost compared to the alternative of fixing the specification for the EES: GUS interface at the outset; this risked reducing the choice of EES suppliers and constraining the interface to a specification which would not cover all possible requirements.

4.2 Supplier liaison and interfaces

The liaison with A123 Systems was reported to have generally worked well, throughout the system build phase, with this being managed via a series of weekly conference calls. However, it was noted that actions which were underway prior to face-to-face meetings were typically addressed during the face-to-face time much more quickly than had they been addressed remotely. As previously noted, such direct face-to-face dialogue in the equipment build phase was limited to a single visit to A123 Systems, for the purpose of the HAZOP study, September 2012. Various face-to-face dialogues did occur in the UK for subsequent design, modification, installation and commissioning phases, related to A123 Systems' direct involvement in these. Reflecting similar comments made in relation to the procurement and system integration phases, the intent, in any future EES implementations of this type, would be to nominate a designated "battery engineer". This would include taking responsibility for the vendor interface, including the discharge of a series of regular day meetings and technical visits, on the supplier's premises.

NPg noted that the primary points-of-contact on the A123 Systems side had remained relatively stable, post the hiatus associated with A123 Systems' re-structuring, following their entering Chapter 11 bankruptcy protection proceedings in the USA. It was also noted that the number of

variations and exceptions involved in the management of the contract had been few in number. Indeed, as of the time of the EES Lessons Learned Workshop, on 9th May 2014, only 5 variations had been initiated, accounting for less than 0.5% of the contract value. The largest single variation was that in relation to the locks and fittings on the EES system enclosures, of value £40,000.

NPg did choose to call upon some variance in the T's&C's, principally to ensure the transfer of title for each system to NPg, as it was delivered, and thereby circumventing any subsequent claim from A123 Systems' liquidator; this was felt to have been a prudent precaution.

The decision was made to retain the site work element within the NPg scope of supply, in order to utilise contractors with familiarity of working on substation sites. NPg noted that they could have commenced work on such civils aspects somewhat sooner, had A123 Systems been able to advise on system dimensions and ground loadings earlier in the process (as previously noted in Section 3.2, in relation to Specification development).

The liaison between NPg and A123 Systems served to reveal a number of differences between the approaches, custom and practices adopted in the two organisations, reflecting those of their UK and US domiciles, respectively. Whilst this was neither surprising, nor demonstrated any failing on the part of either A123 Systems or NPg, two of the more significant cultural differences identified, which impacted on the project were:

- In relation to the initial design and development of the systems: A123 Systems liaison with Northern Powergrid was slightly different to their convention of installing and commissioning the complete system. With Northern Powergrid leading the commission activity, it preferred and engineering approach based on Single Line Diagrams (SLD's) being developed at the outset, further reflecting UK custom and practice prior to further advanced designs being developed. A123 Systems tended to prefer an approach based around the development and build of the systems utilising their existing experience and designs, which caused some engineering complications.
- In relation to the performance of Factory Acceptance Tests (FAT's) and Site Acceptance Tests (SATs): A123 Systems preference and approach is for the performance of a FAT, to demonstrate component functionality. This is in contrast with the UK approach for a more rigorous FAT, intended to demonstrate not only basic functionality, but also the achievement of target performance levels, relative to a number of specification values on the entire system. However, the systems build at different global locations, inhibited full performance testing and an increased level of SAT was required to replicate the initial factory acceptance.

4.3 Summary of system integration and supplier liaison lessons learned

EES LL 4.1. The resilience of the Active Network Management system connection was not deemed sufficient for the communication of alarm states between such a new technology and NPg's control rooms. This required additional, resilient, communication equipment to be installed which increased the required space.

EES LL 4.2. Witnessing the Factory Acceptance Testing would have given the opportunity for early identification of problems which could have been valuable when solving problems during commissioning.

EES LL 4.3. The limited face-to-face time with A123 Systems was hugely valuable, problems addressed during this time were reported to have been addressed significantly more efficiently and effectively than those addressed remotely.

EES LL 4.4. Had the Active Network Management system development not been run in parallel to the EES procurement, the specification and FAT of the EES systems would have been tighter. Future projects where parallel development is not required would take this approach which may reduce difficulties at commissioning.

EES LL 4.5. It was suggested that a person with responsibility for EES integration would have facilitated greater integration with A123 Systems and been the ideal person to witness FAT. This reflects NPg's BaU approach where a standards engineer would conduct a factory assessment prior to product roll-out, followed by the project engineer witnessing Factory Acceptance Testing, where appropriate.

EES LL 4.6. NPg were required to give significant support to A123 Systems to facilitate the understanding of the different operational requirements in the UK compared to the USA. Budgeting time and manpower to facilitate this would help in the future.

EES LL 4.7. Differences in cultural expectations may have been improved by tighter contractual specification for delivery, commissioning and communications.

5. Health and Safety lessons learned

The discussion related to the Health and Safety aspects of the EES implementation opened with the comment that, of the CLNR network related technologies that were implemented and trialled, it was only EES that was a truly new technology to NPg. Significant learning had therefore been generated via its implementation, which provides valuable experience for any such future implementations, both within NPg, and in the wider GB DNO sector.

5.1 External engagement

Early engagement with external parties was a successful part of the EES implementation within the CLNR project. Whilst this requirement is likely to be reduced as EES moves towards BaU, following this approach is recommended for innovation projects of this type. NPg initiated an early engagement with the relevant Fire and Rescue Service, which included a series of visits, to specific sites. NPg commented that these visits resulted in a number of specific comments being made, which were duly taken on-board. The EES sites themselves are all recorded on the Service's register so that, in the event of any incident, the crews that are dispatched to site will be pre-alerted to the nature of the installation.

NPg have also engaged with the Health and Safety Executive (HSE) in relation to their EES related work, both under the auspices of the Energy Storage Operators' Forum (via its February 2014 meeting) and also on a CLNR project specific basis. The latter saw three representatives from the HSE visiting NPg in April 2014, to be briefed on the CLNR project, to see the Active Network Management system and to see the EES1 battery energy storage system. NPg reported that all recommendations put forward by the HSE during the visit were processes that had already been put into place. They also noted that the three HSE representatives were highly impressed with the manner in which health and safety was being regulated and enforced by Northern Powergrid.

Public engagement has been addressed as part of the wider public engagement/relations exercise, which forms an integral part of the CLNR project as a whole. No specific problems are reported to have arisen, in relation to the battery storage installations.

5.2 Health and Safety activities

It was felt that the Health and Safety aspects of the EES implementation were properly and appropriately addressed during the course of the CLNR project. However, as with the various other phases of the EES implementation, the timescales imposed by the overall project served as a driver to addressing the Health & Safety aspects, which sometimes reduced the efficiency of the process.

The genuinely novel and unfamiliar nature of the technology brings with it a range of hazards and their associated risks, which have not previously been encountered in the NPg or wider GB DNO operating environment. The early identification and qualification of these is to be recommended, as is knowledge sharing which has been undertaken by NPg, for example through initiatives such as ESOF and the Low Carbon Networks and Innovation/Low Carbon Network Fund Conference series.

NPg tends to operate with 3rd party service providers to help facilitate their HAZOP and associated safety assessments. The early engagement with such parties is therefore to be advised, when implementing such new technologies as EES.

In practice, the Health and Safety aspects were addressed via a number of specific avenues, including:

5.2.1 Development of the Operational Risk Assessments

NPg chose to work with Parsons Brinkerhoff (PB) Power, based upon their existing working arrangements in the field of hazard and risk assessment. The approach adopted was to conduct a formal Hazard Identification (HAZID) study, complemented by a structured Hazard and Operability (HAZOP) study. The essential starting basis for these studies comprised a facilitated Workshop, conducted on A123 Systems' premises in the USA in September 2012 and involving participation and input from PB Power, NPg and A123 Systems. The outputs from these studies then informed the development of the requisite series of Risk Assessments, for each EES system implementation. NPg commented that they had worked hard on the successful development of these Risk Assessments, with the intent of aligning them, as far as was practicable with Business-as-Usual (BaU).

5.2.2 Fire suppression systems

It was noted that a lot of work was undertaken in relation to liaising with A123 Systems to determine the most appropriate choice of Fire Suppression System (FSS) for the EES systems. In practice, this resulted in the specification of a non-asphyxiating, inert gas, FSS sourced from the Kidde Company. In future projects, this choice would be likely to be used as the starting basis for FSS specifications. Further learning was noted in relation to balancing the requirement for residency time of the fire suppressant gas with the requirement for ventilation during normal operation. This balance is discussed further in Section 6.3.

5.2.3 Operating procedures

The development of Operating Procedures, in relation to the new and unfamiliar technology grouping, presented challenges to the CLNR team. As with the development of the Risk Assessments, described in Section 5.2.1, as far as was practicable, every attempt was made to align these with BaU. The effort to align with BaU was felt to have been valuable in facilitating future EES implementations, and it is suggested that future innovation projects would benefit from this approach. The development of the series of Operating Procedures was informed by input from A123 Systems and from various other sources of expertise, including that from the Energy Storage Operators' Forum (ESOF). The completion of the suite of Operating Procedures was achieved somewhat late in the overall EES project related timescales, but in time to allow the energisation and commissioning of the systems.

5.2.4 Competencies

As for the operating procedures, this presented a challenge both in terms of up-skilling relevant personnel and validating the specific competency requirements to work on the EES systems. This aspect was addressed via a series of structured training sessions, with contributions from A123 Systems, in terms of specific input with respect to their design and system specific aspects.

This programme of training and competency development was directed towards the establishment of a "critical mass" of competency, at each of the four trial zones, via the establishment of a series of

"competency clusters". This also provides a basis for the development of further personnel, as appropriate. It was felt that this approach worked well and would be adopted for future projects.

NPg's Control Centres, as relevant to the CLNR project, maintain lists of such designated competent personnel and also the various Operating Procedures and associated supporting documentation. At the local level, each EES site holds a suite of documentation, including the relevant SLD's, Material Safety Data Sheets (MSDS), points of isolation etc.

5.2.5 Site classification and access control

It was necessary for NPg to treat each of the EES installations in accordance with the Electricity Safety, Quality & Continuity Regulations (ESQCR), such as to provide the requisite level of site security, protection from interference and to protect the wider public.

Access control was implemented via two levels of security. At the site level, boundary fencing or wall was employed on all the sites concerned. At the EES system specific level, the integrity of the storage enclosures is safeguarded by the locking mechanisms employed; included via a contract variation with A123 Systems, as noted in Section 4.2. The EES systems themselves are subject to restricted access by authorised personnel (key-holders) only; this impacted on the lock specification for the enclosures, hence necessitating the variation request on A123 Systems. In future projects, this aspect would be addressed from the outset.

Notwithstanding that the signage on the sites identifies them as battery energy storage installations, at the time of the Lessons Learned Review (May 2014), there had been no known attempts of breaking and entry, either in general or specifically motivated by the battery content. Therefore, there is no specific evidence that battery signage, in itself, results in additional attempted thefts.

5.3 Incidents

One specific incident of note has occurred to date, namely the disruptive failure of a capacitor component within the DynaPower Power Conversion System, associated with the EES1 system, 15th November 2013. The failure is reported to have distorted or displaced three panels on the inverter enclosure, which resulted in the EES1 system being taken off line. No NPg, other personnel, or members of the public were injured as a result of this incident.

The subsequent investigation revealed that the root cause of the explosion was a defective wiring connection in a sealed enclosure, within the invertor unit, which led to an accumulation of vapours from the defective capacitor, which subsequently ignited.

The principal learning from this incident was that of avoiding such sealed enclosures and in ensuring adequate venting. Both of these points were acted upon, in the subsequent re-commissioning of the system.

5.4 Summary of Health and Safety lessons learned

EES LL 5.1. Health and safety engagement should be initiated at the outset of the project (see also EES LL 6.6).

EES LL 5.2. The identification and qualification of the hazards associated with the introduction of such a new class of technology should be performed early, in the overall project timescale, such as to inform the subsequent stages of the project. In particular, such an early identification would provide the opportunity for any implications arising to be assessed and acted upon.

EES LL 5.3. A DNO may not have the internal expertise to manage all aspects of the H&S processes associated with new technologies.

EES LL 5.4. EES sites were classified as "restricted sites", meaning changes to locks and access procedures. This would have been better considered earlier in the project.

EES LL 5.5. The inclusion of new (to NPg) chemicals in the EES systems required COSHH assessment etc. This was found following an assessment of the chemical content of the EES systems, such an assessment should be performed at the early stages of future projects.

EES LL 5.6. NPg used their normal training, assessment and authorisation processes to ensure sufficient availability of competent staff. Compliance with relevant regulations is heavily reliant on appropriate training and assessment of personnel.

EES LL 5.7. Early engagement with the fire service and HSE provided valuable advice.

6. Site selection, logistics, installation and construction lessons learned

6.1 Site selection

Site selection for the CLNR project was primarily driven by the requirement to demonstrate the chosen technologies on networks indicative of 80% of GB's distribution network. It is likely that future projects will be driven by a requirement for a particular benefit of EES and so be directed to a particular feeder, substation or network asset.

6.1.1 Available space

The principal criteria applicable to site selection was available space, in comparison with that required by the EES, informed by the CLNR bid work, performed Summer 2010. Therefore, only sites with the required available footprint were considered, with an additional requirement for availability of the required electrical connections. It should be noted that for all of the battery systems, a significant contribution to the footprint was made by the Power Conversion Systems.

NPg made the decision to construct the EES systems without increasing the maximum height of any of the chosen substations; despite permitted development allowing building height of up to 15 metres. It was felt this decision was beneficial in maintaining positive public engagement and minimising customer complaints.

During the CLNR project it was found that the space required by the EES systems was greater than originally envisaged during the tender process. This was due to inclusion of the support systems required to facilitate connection to the distribution network; which mainly comprised a resilient communications system involving communications hub, firewall, router and power supply.

In addition to the space required to house the EES system, space was required to install the systems by use of skids or cranes. Two of the EES systems were installed with very tight constraints on access; in one case where a system was installed on a skid and, in another case, where space for the required crane was very limited.

6.1.2 Civil works

Two main considerations were highlighted when considering civil works for site selection.

Firstly, that the ground loading for a large battery-based EES is likely to be considerable. NPg undertook vertical load bearing tests at all EES sites, in addition to a number of ground works surveys at the EES1 site to ensure the proposed sites were capable of supporting the EES systems. The details of the expected ground loading were unavailable for longer than anticipated, which threatened to delay the installation. In future, it was felt that specifying, in the contractual arrangement with the supplier, a timeframe for the supply of information required to commence civil works would have removed this risk.

Secondly, it was found that construction and operational noise was of concern to local residents, where the EES systems were located within residential areas, particularly in rural areas. Engagement with residents to minimise noise and disruption related to the installation and operation of the EES system was felt to have been valuable in maintaining positive customer relationships.

6.1.3 Other considerations

Other points relevant to site selection included:

- The requirement for access and egress for emergency service vehicles at EES sites.
- NPg increased the security around each EES site to beyond that required by an equivalently sized sub-station. If this becomes normal practice for BaU, then consideration of the space required for additional fencing or security will be required during site selection.

6.2 Logistics

The EES systems were shipped from the USA to the installation sites by the system supplier. Whilst this shipping arrangement required NPg to pay import duty on the EES system, it was felt that this arrangement would be used again as it conformed to standard NPg practice for substation equipment and transferred the responsibility for delivery to the system supplier.

Due to the status of Lithium-Ion batteries as Class 9 Miscellaneous goods, under the Carriage of Dangerous Goods Regulations, a licensed logistics supplier was required to provide shipping, haulage and cranage services. As the supplier was based in the USA, NPg facilitated a UK based haulier and crane operator, which eased installation as an existing relationship was in place with those suppliers.

6.3 Construction and installation

It was felt that the construction and installation phase was completed with few problems. Those problems that did occur were primarily a result of changes due to complexity which was not anticipated prior to construction or faults which required attention prior to commissioning. Given the nature of the project, it was felt that the required changes were as minimal as could have been expected.

A key point which the CLNR team felt would be done differently in future innovation projects related the Construction (Design and Management) Regulations (CDM). CDM requires that the HSE be notified of construction projects which last more than 30 days or require more than 500 man days of construction work. For a project of the scale and diversity of the CLNR, it is unclear whether the best approach would be a single CDM notification for the whole project or multiple notifications for different sub-projects. It was felt that it would have been better to give notification for the CLNR project when the project was awarded funding, prior to the design or tender process. This would have allowed earlier involvement of the HSE and further minimised potential liabilities. This point reflects the comments around EES LL 5.1 above.

Changes made to the design, during the construction phase, were mainly limited to those imposed by the development of requirements for the Active Network Management system. However, a small number of additional changes were made which included:

- Increased segregation of different sections of the EES system housing. For example, additional Perspex screening was included to ensure the required isolation between personnel and HV equipment.
- The Fire Suppression System specification was altered to better align with the standard system used in other NPg sub-stations, whilst also addressing the specific requirement of the EES systems.
- The specification for the ventilation system was altered to balance the requirements of air circulation for cooling and gas retention for fire suppression (see Section 5.2.2).
- A variation was issued to include an output card for each EES which directly integrated EES alarms, using conventional open contacts, into the NPg's existing SCADA system. It was decided that the Active Network Management systems convoluted communications were insufficient for the purpose of connecting alarms for such new equipment to the NPg control centre.

6.4 Summary of site selection, logistics, installation and construction lessons learned

The following key lessons learned are related to site selection, logistics, installation and construction. Lessons learned have been gained from appreciation of successful practice and on reflection of what would be done differently with hindsight:

EES LL 6.1. Required space for the EES systems was greater than originally anticipated due to the number of additional systems required; these included resilient communications, router, firewall and alarm control systems, all with appropriate power supplies.

EES LL 6.2. Space calculations should include the requirement for access to install the EES, by whatever means envisaged, in addition to the space required for the EES system.

EES LL 6.3. A licensed logistics supplier and crane operator was required, due to the classification of the batteries are Class 9 Miscellaneous goods under the Carriage of Dangerous Goods Regulations.

EES LL 6.4. Ground loading information was unavailable from the battery manufacturer for a significant period which threatened to delay the project by delaying design and implementation of ground-works. In future this might be mitigated by supplier liaison or inclusion of ground loading in the tender specification.

EES LL 6.5. The requirement for battery ventilation conflicted with requirement for the fire suppression agent to be contained. In future projects this conflict will be resolved during the design and specification phases.

EES LL 6.6. In future projects the Construction (Design and Management) Regulations (CDM) notification should be considered prior to tender.

Image 3: The CLNR video 'Electrical Energy Storage and its place in a low carbon future' documents challenges faced during site selection, logistics, installation and construction.

7. Commissioning lessons learned

7.1 Planning for commissioning

Liaison with A123 Systems presented challenges around the commissioning process. The EES systems previously sold by A123 Systems were installed without the commissioning process required for connection to a GB distribution network. Therefore, significant effort was required to work with A123 Systems to develop an understanding of the commissioning requirements and, subsequently, to develop an approved commissioning plan. It was noted that this effort would be likely when supplied by any vendor without experience of placing EES systems on UK distribution networks.

NPg worked with A123 Systems to use a commissioning plan, based on that used by National Grid, to structure the commissioning tests planned by A123 System in a manner which allowed NPg to have confidence in the coverage of the commissioning testing – this approach was felt to have worked well. However, challenges arose around reducing the commissioning plan to manageable steps and there was some resistance from A123 Systems to the scrutiny by NPg personnel around commissioning and testing requirements. It was felt that a clear specification of the required commissioning process, during the procurement phase, could have reduced the time required of NPg personnel for planning of commissioning.

7.2 Commissioning

Two key themes emerged during the discussion on commissioning: The difficulties associated with commissioning a software based system; and the extensive time required to commission 'first of a kind' equipment.

It was noted that commissioning a software intensive EES system would be approached differently in future. The skill set required to prove bespoke software functionality is outside that of NPg commissioning engineers, there was a general feeling amongst the CLNR project team that software proving was difficult, expensive and prone to the requirement to repeat the testing as software is updated. In order to overcome concerns around the protection functionality of the EES system software, the EES systems were fitted with conventional G59 relays which also allowed commissioning engineers to perform commissioning tests in line with their normal practice. It was felt that the inclusion of this protection was the best solution and subsequent projects would benefit from including this provision in the system plan.

The time required to commission the EES1 system was around 7 months, including time to assess and repair failures and functional flaws in EES system, with the associated retesting necessary. The extended timeframe was due to a number of changes, some of which would have been expected with the commissioning of any new technology with the level of complexity of the CLNR EES systems. Other delays were due to changes which were required to allow the EES to comply with the stringent requirements for equipment installed on a GB DNO network (these included protection, communications, signage, locking and safe systems of work). Finally, the disruptive failure discussed in Section 5.3 required that a number of additional modifications were made.

It was felt that commissioning for subsequent systems could be achieved in 2 weeks for the EES1 system and 1 day for the EES2 and EES3 systems.

7.3 Summary of commissioning lessons learned

The following key lessons learned are related to commissioning:

EES LL 7.1. Achieving buy-in to the commissioning process from the EES supplier was challenging. Inclusion of the commissioning requirements in the supplier contract could have clarified the requirements for supplier at the outset, particularly where the supplier is not familiar with the UK market.

EES LL 7.2. Commissioning of software based systems was found to be difficult, proving software functionality is outside of the expertise of NPg commissioning engineers.

EES LL 7.3. It was felt that, for future projects, both planning to include G59 protection relays and the early involvement of commissioning engineers would be the best way to minimise the challenges of commissioning software based systems within a new product.

8. Training, skills, operation and maintenance lessons learned

8.1 Training and skills

It was felt that the training processes around EES were a successful part of the CLNR project. The CLNR project required that personnel were trained to work in the substations housing EES systems. Given the geographic area and 24 hour coverage required, it was necessary to train around 40 staff. The training process used NPg's in-house, ISO 9001 accredited, training supplemented by technical details from A123 Systems. Training and assessment was aligned with the business-as-usual process at NPg where authority is sub-divided to permit access, operation and working on the network asset – this was felt to have been the correct approach.

It was noted that the requirement for training all NPg maintenance staff to work with the EES systems would involve considerable time and cost. If the EES systems were rolled out across the NPg network then there would be a strong preference for integrating the EES training into the standard training schedule to increase the number of trained staff progressively.

A number of measures were taken to ensure that the EES systems were only accessed by appropriately trained and authorised personnel:

- The building which housed each EES system was signed with contact details of the control centre which could task the appropriate personnel.
- The control centres responsible for tasking maintenance personnel were provided details of those personnel with authorisation and it was ensured that sufficient staff were available at all times.
- The security of each substation was upgraded with new doors, locks and perimeter security to prevent access by unauthorised NPg staff or members of the public. This was not initially anticipated and was included in the project as the need became apparent.

8.2 Operation and maintenance

8.2.1 EES Operation

The CLNR project has endeavoured to operate the trial technologies in a state which is as close to Business-as-Usual as possible. At the end of commissioning, standard NPg procedure is for a new network asset to be transferred from a construction state to an operational state. In the case of the CLNR EES systems, the project team retained a level of control so as to monitor the technology and perform the necessary trials, measuring the performance of the EES systems against the anticipated benefits to the distribution network. All EES systems were operational at the time of writing and have been demonstrated operating as part of an autonomous intelligent substation and under control of the Active Network Management system. In addition, tests have demonstrated controlled four-quadrant operation for both voltage and thermal constraint avoidance.

The predominant point noted, when considering the operation of the EES systems, was the ongoing requirement for more manual intervention than anticipated to maintain the EES systems in an operational state. This intervention is primarily in the form of manual resets to the EES control and communication systems but represents an unanticipated burden on project resources. In addition, frequent visits by project personnel to the EES sites have precluded the need for inspection schedules which is discussed further in Section 8.2.4.

8.2.2 Operational noise

Noise was a concern for residents near the EES systems, as discussed in Section 6.1.2. NPg conducted noise surveys in the area around the EES systems and found that the emitted noise did not exceed the ambient noise in urban areas. However, in the rural Wooler area the noise from the EES systems did exceed background noise levels. In addition, it was noted that the nature of the noise due to the EES systems is different to that created by standard substation equipment and may cause different problems to neighbours.

The two primary noise sources for the EES systems are the air-conditioning units and the inverter cooling fans. This raised concerns that a sudden increase in noise associated with operation of the battery would be more noticeable to residents then the more consistent noise associated with substation switchgear.

Following commissioning, NPg received a number of noise related complaints from residents neighbouring the rural EES2 and EES3 units. Noise surveys were conducted to assess the impact of the EES systems on the local noise levels and acoustic screening was installed to reduce noise emissions to a level acceptable to residents. At the time of writing, noise surveys had shown that acoustic screening has reduced emitted noise to a level below the background noise level and no further complaints had been received.

As discussed in the Section 3.2, it was felt that future projects would benefit from the inclusion of a specification requirement for the maximum allowable acoustic emissions (noise) from the EES system. In the context of the CLNR project, this point has subsequently been acted upon, via a revision of the NPS documents, specifically considering BS EN 4142. This approach would allow the responsibility for noise emissions to be placed on the manufacturer whilst still providing them the freedom to develop solutions of their choosing.

8.2.3 State of charge measurement

One of the primary functions of a battery management system is the measurement of the state of charge of the EES system. For the CLNR EES systems, this is then communicated to the Active Network Management System so that the availability of the EES systems is known. However, it has been noted that the accurate measurement of the state of charge of an EES system, regardless of battery manufacturer, is exceedingly challenging.

The A123 Systems' battery management system uses measurements of individual cell voltage to calculate the total state of charge of the EES system. In the case of EES1, there are over 20,000 cells, and the difference between 0% and 100% state of charge may be as little as 1.25V. Furthermore, the voltage is influenced by the direction and magnitude of current flow. This combines to give state

of charge measurements which are not as accurate as could be desired for distribution network applications.

To overcome these challenges, the battery management system includes provision to ensure that the battery cannot be over charged or discharged, due to the hazards associated with either scenario. In the case of the Active Network Management system, it was suggested that a tolerance be included so that the Active Network Management system could avoid a situation where an EES system was relied upon to charge or discharge, and was unable to meet the requirement.

8.2.4 EES maintenance

NPg have a 3 year contract with A123 Systems for the provision of maintenance services. At present NPg personnel do not perform any maintenance or inspection of the EES systems. It was noted that this arrangement, whilst beneficial in terms of training requirements, exposes the project to the potential risk of A123 Systems being unable to fulfil its obligations in the event of any major changes or re-structuring of the company or its offerings. NPg have mitigated this risk by the provision of a considerable spares inventory at an NPg site and dissemination of the operational manual for the EES systems. However, it was noted that NPg do not have access to the EES service manual and that assuming responsibility for maintenance at short notice would be difficult. However, A123 Systems provide the maintenance services via a UK based contractor, and it was felt that NPg would be able to manage a similar contract themselves at short notice, if required.

It was noted that allowing A123 Systems remote access to the EES system – via VPN – has been of significant benefit. A123 Systems are able to remotely monitor the EES systems for alarm states, as well as routine condition monitoring. Furthermore, A123 Systems have been able to make changes to the EES systems overnight to allow timely resumption of operations.

The requirement for formalisation of an inspection regime for the EES systems was discussed. Primary substation sites are inspected on a monthly basis by NPg, it was felt that this timescale could be reasonable for the EES systems regardless of their location. However, at the time of writing the EES sites were subject to more frequent visits by NPg personnel, to maintain operation and so no inspection regime had been required. Furthermore, it was felt that insufficient experience of operating the EES systems had been gained to comment on the merits of different inspection and maintenance policies.

The final discussion point relating to maintenance was that the air-conditioning units on the EES1 site were located beyond the reach of the gantry access. This resulted in a requirement for working at height, with its associated safety procedures including edge protection and fall-arrestors, to protect maintenance staff, greatly increasing the cost and time associated with maintenance of the air-conditioning units.

8.3 Summary of training, skills, operation and maintenance lessons learned

The following key lessons learned are related to training, skills, operation and maintenance:

EES LL 8.1. Allowing the manufacturer remote access to the system has given significant benefits in terms of diagnostic assistance.

EES LL 8.2. NPg have a maintenance contract in place with A123, the risk associated with having access to this expertise through a single source has required managing.

EES LL 8.3. The use of a single supplier for all the EES elements has allowed a reduced parts inventory to be maintained by NPg.

EES LL 8.4. Noise surveys were undertaken to ensure positive public engagement and compliance with appropriate Regulations (BS 4142 is often cited with reference to substation noise). In future these would be specified at the procurement stage.

EES LL 8.5. The use of fire suppression panels identical to those found in other sub-stations allowed easier staff familiarisation and reduced training requirements.

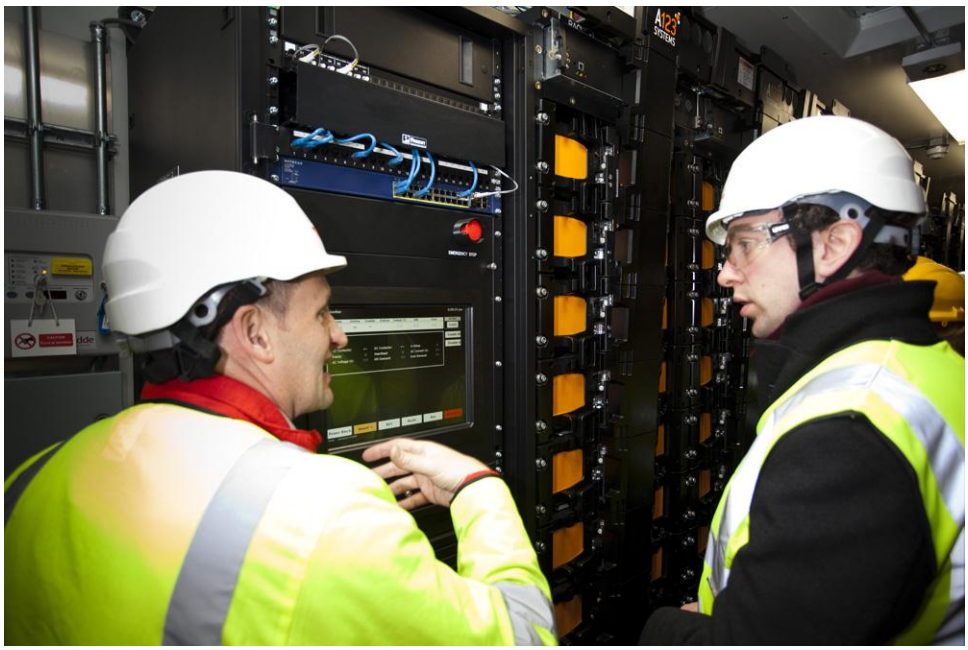

Image 4: Training, skills, operation and maintenance

9. Performance

This section describes the performance of the various EES systems throughout their use as a part of the CLNR Smart Grid. The performance is described as two distinct areas; firstly, the performance of the individual EES systems themselves and secondly, the performance of the EES systems in providing thermal and voltage support for the NPg distribution network.

9.1 EES system performance

9.1.1 Performance metrics

This section documents intrinsic performance characteristics of the EES systems including capacity, round trip efficiency, parasitic losses and response time. In each case, data have been collected via the sensor and data acquisition hardware installed around the CLNR installations. Table 9.1 shows the measured parameters for three of the installed systems, to demonstrate the differences between the three installed classes of EES.

Table 9.1 – Measured EES Parameters

System Parameter	EES 1 (Rise Carr)	EES 2 (High Northgate)	EES 3 (Harrowgate Hill)
Capacity	5292 kWh (measured)	200.3 kWh (measured)	105.9 kWh (measured)
Round Trip Efficiency (excluding parasitic losses)	83.2%	86.4 %	83.6 %
Average Parasitic Load	29.5 kW	2.50 kW	1.77 kW
Round Trip Efficiency including parasitic losses, assuming one charge/discharge cycle per day	69.0%	56.3%	41.2%
Response Time	< 1 minute	< 1 minute	< 1 minute

9.1.2 Method for calculating the EES system performance

The performance figures shown in Table 9.1 have been calculated using a variety of input data including state of charge, imported power, exported power and power drawn from the auxiliary system power supplies. Round trip efficiency has been calculated over a two week period, where each of the EES systems were in use for trials. Parameters used in the calculation were stored energy, power imported and power exported from the battery, all recorded with one minute resolution. Efficiency is calculated as:

$$\frac{Energy\ Exported\ (kWh) + Increase\ in\ Stored\ Energy\ (kWh)}{Energy\ Imported\ (kWh)}$$

Parasitic losses were recorded using power quality instruments which recorded current and voltage on the auxiliary power supplies for the EES support systems including lighting, heating, ventilation and air-conditioning. Efficiency including parasitic losses was calculated by assuming a 24 hour period with a single charge/discharge cycle and subtracting the parasitic losses for a 24 hour period from the exported energy.

EES system capacity and response time were noted during discharge testing of each battery during the commissioning process. The commissioning tests included a discharge of each battery, from a fully charged state, at the maximum (2 hour) power rating.

9.2 EES support of the Northern Powergrid distribution network

The use of the EES systems, as part of a Smart Grid, to provide voltage, thermal and reactive power support for DNO networks is analysed by the VEEEG series of reports written the CLNR project's academic partners, Newcastle University.

The analysis completed by the VEEEG work has shown that each of the EES systems can be used to influence voltage on low voltage feeders on the distribution network using both real and reactive power capabilities. Thermal support of primary and secondary transformers has been demonstrated by dispatching real power from the EES systems. The use of the EES inverters to contribute to reactive power support, independent of voltage support has also been shown. In each case, the use of the EES as part of an autonomous intelligent substation or a wider Active Network Management system has been demonstrated.

10. Decommissioning and end-of-life disposal / recycling

There are no immediate plans to decommission or dispose of the CLNR EES assets. Therefore, at the time of writing, there are relatively few lessons which can be drawn around the end-of-life considerations for the assets.

Following discussions with the CLNR project team at the Lessons Learned Workshop, subsequent site visits and conference calls, a number of points have been noted:

- During the tender process, A123 Systems scored highly for their end-of-life procedures and capabilities.
- The EU Waste Batteries and Accumulators Directive apply to the CLNR storage assets. Under this directive, A123 Systems (now NEC ES) are registered as a "Producer" which confers, on them, a requirement to "take back" the battery systems for disposal. However, it should be noted that there is no restriction on the cost associated with this service.
- NPg have updated their environmental policy to incorporate a requirement for safe and appropriate recycling of the storage assets. The updating of the environmental policy is subject to further development in due course.

11. Conclusions

The CLNR project has successfully procured, commissioned and operated six electrical energy storage systems, including the largest battery energy storage system currently commissioned in Europe. The CLNR project has demonstrated that grid-scale EES can be deployed on GB distribution networks, procured via a competitive tender process, to contribute to the mitigation of voltage constraints, thermal overload and reactive power support. It has also been shown that these benefits can be accessed when the EES is operated as part of an autonomous intelligent substation and when controlled via a wide-area Active Network Management system. The procurement has been completed within the ambitious timescale of just less than three years.

The performance of the EES systems has been analysed. The energy storage and power delivery of each unit has been shown to meet or exceed the specified values. The round trip efficiencies for the EES systems have been calculated as between 83% and 86%, falling to between 41% and 69% where parasitic loads are included (assuming one charge/discharge cycle per day).

This report presents lessons learned, both where the project has been successful and where, with the benefit of hindsight, a different approach could be adopted for future projects. The key outputs of this report are the lessons learned which are presented in the relevant sections, and fall within the following topics:

- Design, Specification Development and Procurement
- System Integration and Supplier Liaison
- Health and Safety
- Site Selection, Logistics, Installation and Construction
- Commissioning
- Training, Skills, Operation and Maintenance

A number of themes run throughout the various lessons learned. Firstly, that the market for grid-scale electrical energy storage remains relatively immature. A number of the lessons learned relate to the relatively small number of potential suppliers and the lack of familiarity between those suppliers and GB DNOs. This resulted in tensions around commissioning requirements, timings of information delivery and mutual expectations which are believed to have been unavoidable, for a new supplier of new technology, and subsequently well managed to avoid significant delays to the CLNR project.

Similarly, lessons learned have arisen around health and safety, commissioning and operation due to the relative unfamiliarity of GB DNOs to grid-scale electrical energy storage. For example, lessons have been learned around the atypical hazards surrounding fire-suppression; transport of lithium-ion batteries; and the challenges of training a sufficient number of support engineers to operate and maintain the EES systems, an area where it is believed that little could have been improved.

Customer-Led Network Revolution

For enquires about the project
contact info@networkrevolution.co.uk
www.networkrevolution.co.uk